Corporate magazine
Fingrid Oyj
3/2006

FINGRID

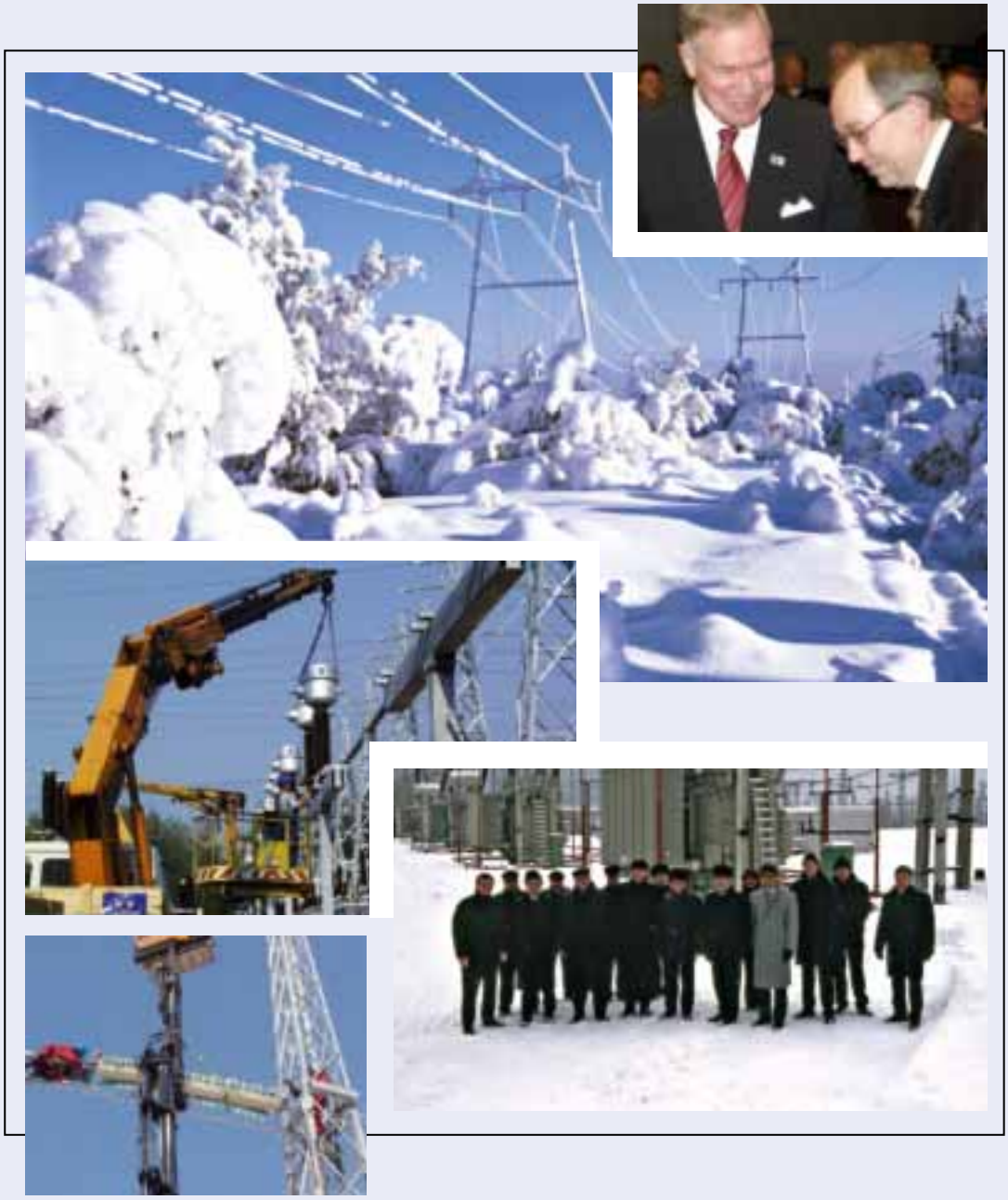

FINGRID
Corporate magazine
Fingrid Oyj

9th volume
3/2006

Editorial staff
Telephone: +358 (0)30 395 5000, Fax +358 (0)30 395 5196
Postal address: P.O.Box 530, FI-00101 Helsinki, Finland
Street address: Arkadiankatu 23 B, Helsinki, www.fingrid.fi
Editor-in-Chief: Leni Lustre-Pere, leni.lustre-pere@fingrid.fi
Editorial board: Jari Helander, Aila Itäpää, Antti Linna, Erkki Stam
Design by bbo, Better Business Office Oy, Maria Hallila and Tuija Sorsa
Translation by Kielipaja Hannu Hakala

Published by
Fingrid Oyj

Cover photographs by Juhani Eskelinen
Printed by Lönnberg Print
ISSN 1456-2693

In this issue

Editorial
Fingrid's ten years 4

Two aspects into Finland's national legacy
Fingrid's decennial jubilee seminar had two topics: the Finnish grid and the treasures of the ship St Michel, which sank in 1747. Both are part of national legacy in Finland. 6

Hannu Linna is the new Chairman of Fingrid's Advisory Committee
Hannu Linna, Managing Director of Vaasan Sähkö, likes challenging duties. As of the beginning of 2007, he will serve as the Chairman of Fingrid's Advisory Committee, which consists of the representatives of the company's customers. 10

Fingrid's stable finances
The finances of the Finnish grid operator have stabilised in ten years, and it has elevated its equity ratio from 10 per cent to 25 per cent. 14

Fingrid's capital investments anticipate the needs of customers and market
The foremost development issues in the Finnish grid are related to the present and future needs of the customers and of the electricity market. 18

Mere forecasts are not sufficient in long-term grid planning
Successful plans call for close and confidential co-operation with customers and the other Nordic TSOs. 21

From good to excellent
At the beginning of this millennium, Fingrid's customers rated the company's performance with a grade of above 8 on a scale from 4 to 10. Nowadays, customer feedback gives an excellent grade, 9. 24

High system security requires constant preparations for the worst case scenario
The engineering and operating principle applied to the Finnish power system is to make preparations for the worst possible single fault at any given moment. 27

Electricity market is opening – although slower than expected
In the early phases of electricity market liberalisation, it appeared that the objectives of the reform could be fulfilled quickly and easily. However, the functioning of the market has been subject to increasing criticism lately. 30

In brief 32

Demanding but successful operating model guides asset management. 34

Electricity from Russia
Fingrid wishes to have genuine co-operation, which benefits all parties, with Finland's eastern neighbour. It must be possible to assess the future and development needs using mutually accepted principles. 38

Fingrid's many dimensions of environmental responsibility
The implementation of new transmission line projects depends crucially on attending to environmental responsibility as well as possible. 42

Grid operator promotes and produces heavy-duty expertise
Constant development of Fingrid's duties and procedures has meant that learning new things is a permanent state of affairs for the company's employees. In its R&D, the company has focused above all on ensuring system security. 46

Unused power plants into short starting readiness
Through a new act which came into effect on 15 December 2006, condensing power plants which have been at standstill are harnessed to secure electricity supply during the peak load period as of the beginning of 2007. 48

Grid ABC
Direct current electricity transmission 51

In brief 54

Work of Line Supervisor
Fingrid's Line Supervisors know the location of just about every tower in their area. Ossi Muuronen is one of these persons attending to the Finnish grid. 56

In brief 60

All in a day's work
Telemark and balance trade 61

In the net
Time is now. 62

Fingrid's ten years

The developments which ultimately led to the establishment of Fingrid commenced in the late 1980s, when private industries founded Teollisuuden Voimansiirto Oy. Industrial enterprises concentrated the management of their transmission grid to this company. The company had plans for reinforcing its grid from the Swedish border along the Finnish coast all the way to the Russian border. The purpose of having their own grid was to ensure the transmission of electricity needed by industries from their own power plants to industrial facilities and to improve the options for imports of electricity.

In the early 1990s, it started to look apparent that the mere supply of electricity would give way to an electricity market. This was due to amendments in European legislation and an objective of a single European electricity market. One prerequisite for the creation of the electricity market was that the grid business was to be separated from the electricity trade. Imatran Voima (IVO) transferred its grid business to IVO Voimansiirto Oy in the summer of 1992 and, with the exception of cross-border lines, made the grid available to all parties, applying uniform tariffs. At around the same time, the idea of a single grid company started to emerge. When the Electricity Market Act came into effect in 1995, it was certain that a single grid operator would be established in Finland. The government backed this idea.

Imatran Voima Oy, Pohjolan Voima Oy and the Finnish government signed the founding documents of the grid company on 29 November 1996. As was originally agreed, the ownership basis of the company was later expanded to insurance companies. In this way, the majority of the company shares were owned by private enterprises, as had been planned. At the founding stage, rather strict objectives were imposed on the company alongside the statutory obligations. These main objectives were the requirement concerning equality and efficiency, a programme for the reduction of tariffs, and an obligation to give the total interests of the market priority over the company's interests in the promotion of the electricity market both in Finland and internationally.

The biggest business transaction by that date in Finland was signed on the last day of August in 1997. Fingrid (which was then named Suomen Kantaverkko Oy) acquired grids from Imatran Voima Oy and Pohjolan Voima Oy with the related business at a total price of 6,800 million Finnish markkas (1,140 million euros). From the beginning of the next day, the Electricity Market Centre (presently Energy Market Authority) ordered Fingrid to assume responsibility for grid operation in Finland, and the company's actual operations were launched on 1 September 1997.

The company had a good basis on which to start. It obtained a technically coherent and reliable grid, valid business contracts, extensive data systems, and proficient personnel. Since the practical measures for liberalising the electricity market had only just started and since the company had a crucial role of a trailblazer, Fingrid was subject to suspicion and criticism during its early phases. Many customers considered that the new point pricing principle and the structure of the grid tariff were unfair. Moreover, not all customers considered it necessary to invest in cross-border connections.

Fingrid's basic mission as a transmission system operator was clarified, and it earned general acceptance during its first few years of operation. The amendment of the Electricity Market Act in 1998 gave the company responsibility for maintaining a balance between electricity consumption and production in Finland. The purchase of reserve power plants at the end of the same year ensured proper management of the technical functioning of the power system. The Finnish grid was brought to its present extent when Fingrid bought Kemijoki Oy's grid lines.

From the very beginning, Fingrid has worked actively to remove the obstacles impeding the Nordic market. Cross-border tariffs on the connections between Finland and the other Nordic countries were abandoned in 1999. The Nordic electricity exchange was developed by separating the physical electricity trade from Nord Pool ASA to a separate company Nord Pool Spot in 2002. Fingrid became its co-owner after lengthy negotiations. Nordel was made a co-operation organisation for the Nordic transmission system operators. As early as the beginning of this decade, the Nordic market was the most progressive international electricity market in Europe and probably in the entire world. In many ways, the procedures developed within Nordel have been an example in the creation of the European electricity market. Fingrid has participated actively in this development work.

Co-operation with Russian organisations became closer when the transmission capacity on Fingrid's cross-border links from Russia became available for reservations at the beginning of 2001. During the past five years, this transmission service has been used by well over 20 international players. Technical co-operation with the Russian party had a concrete manifestation in the engineering and construction of the third 400

kilovolt cross-border connection commissioned in early 2003, and in the renovations of earlier connections. In line with the market reform in Russia, the division of responsibilities has become clearer, and the Russian grid operator FGC UES has become our natural partner. Fingrid and FGC UES have developed both grid operation and the principles of transmission capacity in good co-operation.

Throughout its existence, Fingrid has considered it vital to keep the system security of the grid at a high level by enhancing the operation and maintenance of the power system. In order to secure electricity transmissions by its customers, Fingrid's capital expenditure in the Finnish grid over the past 10 years has totalled approx. 300 million euros. Outages experienced by consumers as a result of faults in the transmission grid have consequently remained at a marginal level of a couple of minutes annually. The company has a grid development plan, which extends well into the 2010s and is based on the customers' forecasts, for securing system security also in the future. New forms of co-operation have been created continuously with various environmental parties so as to ensure that the environmental aspects relating to the operation, maintenance and construction of the grid are considered as thoroughly as possible.

Fingrid has provided additional transmission opportunities on the cross-border connections, anticipating the needs of the market. The transmission capacity across the Swedish border has almost doubled. This capacity will increase further when the sea cable link which is currently being constructed will be ready by the end of this decade. Transmission capacity across the Russian border has been raised by 50 per cent. Capital expenditure in expanding the cross-border capacities has totalled approx. 200 million euros.

The efficiency requirement and the programme for reducing the tariffs, imposed on the company, have required constant development of operating models and procedures. Adherence to the basic mission has supported this objective. The vital core expertise has been kept in the company, and it has been developed actively. The implementation of grid maintenance and construction projects as well as local grid operation are purchased through competitive bidding, applying an efficient supplier model. In several years, Fingrid has been in the forefront internationally in benchmarking concerning the quality and efficiency of grid maintenance.

Fingrid has had a positive financial trend. Equity ratio has been raised from 10 per cent to 25 per cent while at the same time the nominal reduction in the tariffs has been more than 20 per cent and the de facto reduction some 40 per cent. Fingrid's transmission tariffs are hence the most inexpensive on a European scale. Fingrid's financial outlook for the future also appears to be promising. One crucial contributory factor to this is the company's favourable debt programme, which has been achieved at a sufficiently high rating level.

During its ten-year existence, Fingrid has well exceeded the efficiency and tariff reduction objectives imposed on it. The company has also spent more money than the other Nordic countries in raising the cross-border capacities and developed actively other solutions promoting the market mechanisms. The company has attained the trust of both its owners and customers as a proficient and equal party. We have created a Fingrid way of working, which has also meant that personnel have participated actively in developing the company and their own expertise. Customer satisfaction has already reached a level which requires constant development just to retain it.

As I retire from Fingrid at the end of this year, I do it with a satisfied mind. Together, we have been successful in implementing the basic mission given to Fingrid and in improving our performance constantly in all sectors. The results achieved by Fingrid show that the model applied to the Finnish grid business is appropriate. Improving the functioning of the electricity market has come to the public eye. There is still room for improvement in its functioning. Cross-border capacities on the other Nordic borders need to be upgraded so that they correspond to the needs of the market. However, the primary issue is to improve the opportunities for investments in production capacity, which would promote competition, also in the other Nordic countries alongside Finland. Constant improvement of Fingrid's own performance and changes in its operating environment will require a strong development approach from the company in the future, too. It is hence a great future challenge for Fingrid to retain its pioneering role.

It is with my best wishes that I pass this work to my successor. I would also like to thank our customers and other stakeholders for constructive co-operation throughout Fingrid's ten-year existence.

Timo Toivonen is Fingrid Oyj's President and CEO until 31 December 2006.

The rare Meissen porcelain objects represent the most valuable finds from the St Michel. More than 100 of such items have been recovered from the wreck. All porcelain items are fully intact and most of them still look as if they had just been bought in a shop.

Paavo Lipponen, Speaker of Finnish Parliament, brought the congratulations of the state of Finland to the transmission grid operator celebrating its decennial history. Timo Toivonen, President & CEO of Fingrid, is shown on the right.

Marine archaeologist Anna Nurmio-Lahdenmäki gave a presentation of the wreck of the St Michel and its research. She served as the researcher responsible for the most recent field work on the wreck.

The venue for Fingrid's jubilee seminar was the auditorium of the National Museum of Finland. A concise exhibition "S:t Mikael 1747" had been completed at the Museum.

Fingrid's decennial seminar opened

TWO ASPECTS INTO FINLAND'S NATIONAL LEGACY

Fingrid celebrated its 10-year history in a seminar where the topic of the transmission grid had an accompanying theme: the tale of the ship St Michel which sank in 1747.

TEXT BY Maria Hallila PHOTOGRAPHS BY Juhani Eskelinen

The two topics of the seminar had a common denominator, which was described by **Matti Tähtinen**, Fingrid's director for stakeholder relations, in his opening words. Since 1998, Fingrid has been sponsoring underwater research at the wreck of the St Michel, which lies at a depth of 40 metres off the south coast of Finland. The company has also published an illustrated reference book on the ship and its valuable cargo. The English edition of the book was published in conjunction with the seminar.

"The treasures recovered from the St Michel are part of our national heritage – just like the transmission grid", Matti Tähtinen stated.

Ownership basis of grid operator secures efficiency

Paavo Lipponen, Speaker of Finnish Parliament, discussed in his presentation the impact of energy infrastructure on Finnish competitiveness. He reminded the audience of the early stages of electrification in Finland all the way from 1895, when three power plants were constructed in the river Uuksunjoki in Karelia for electricity supply to the Pitkäranta mines.

"This being the centennial year of the Finnish Parliament, it is appropriate to remember how Finland, which had just recently gained its independence, banned in 1919 the exports of electricity produced by domestic power sources and imposed strict conditions on foreign ownership in companies which governed Finnish natural resources," Paavo Lipponen said. He went on to the present situation, where Finland is much more international and where barriers are no longer set.

"At the same time, we have the problem that there is not sufficient capacity for sales, and more competition is needed on the market."

Paavo Lipponen stated that the reliable supply and transmission of electricity are necessary for the welfare of society and development of business. He commended Fingrid for achieving a situation where "the transmission prices in Finland are low, and we do not have bottlenecks like in the other Nordic countries."

The Speaker also presented his view of the discussion prompted by Fingrid's ownership structure, which differs from that in the other Nordic countries.

"Sweden and Norway apply a unilateral ownership model while in Finland the transmission system operator has owners from several sectors: government, industries and energy companies. In the Finnish system, no individual party has absolute authority, and the responsibility is shared."

According to him, if the grid was transferred to the government, capital investments would probably become more complicated.

"A majority of all capital expenditure in the Nordic grid in this millennium has been carried out in Finland. I can see no reason why our well-functioning system should be changed to that applied in our neighbouring countries, or combined with their system," Paavo Lipponen stated.

Northern model country in energy policy

According to Paavo Lipponen, the energy policy applied in Finland has been exemplary throughout history. "The OECD has assessed that the strength of Finland is a diversified energy production architecture."

The demanding northern conditions and an energy-intensive business structure will continue to set the boundaries for the Finnish energy policy also in the future. Energy consumption per capita in the Nordic countries is much higher than in Continental Europe.

"The Nordic countries have also worked to solve the energy issues, and

the electricity exchange is a good example of a market which works despite its problems."

Paavo Lipponen said that the growth of the Finnish national economy still rests to a great extent on the competitiveness of the basic industry. The continuity of this competitiveness can be ensured by energy decisions which take into account our special circumstances and by means of progressive technologies which are also eligible for exports.

He continued that the important markets in Russia, China and India will require gigantic capital investments in energy infrastructure in these countries. "Especially Russia is in urgent need for additional electricity production capacity. IEA's recent energy review also states that the need for additional energy in the EU area is approximately one third from the present level by 2030."

Balanced energy palette comes from the joint effect of several factors

Paavo Lipponen also touched on a recent topic, energy self-sufficiency, by emphasising the importance of a balanced and diversified energy palette.

"The security of supply of energy must gain more attention, which is why we need more own capacity, still reducing the emissions," he pointed out.

"The production capacity must match the growth in consumption, and therefore nuclear energy has a focal role in the versatile energy production architecture in Finland. Without new nuclear power capacity, in addition to the fifth reactor being constructed, Finland cannot manage its obligations concerning a reduction in carbon dioxide emissions."

When speaking about the electricity market, Paavo Lipponen emphasised the significance of reciprocity. "In international trade, all players must play by the same rules," he underlined.

He said that it is in Finland's interests that the energy market within the entire EU is liberalised at equal terms, and that this serves the objectives of the Lisbon strategy. According to him, the Commission of the EU should make it clear to its member states that they must take care of sufficient production capacity.

Lipponen said that the EU now understands the need for a shared energy policy vis-à-vis Russia. He considered that the Lahti summit was a turning point in this respect, and added that in the coming weeks, the EU will have a shared mandate for negotiations to be conducted with Russia on a new partnership and co-operation agreement.

At the end of the seminar, the guests had an opportunity to visit the concise exhibition on the St Michel. The exhibition will be open until 13 May 2007.

Fingrid's challenges continue to be demanding

In his presentation, **Timo Toivonen**, President and CEO of Fingrid, gave a summary of the achievements of the company over the past ten years. (The phases of the various sectors and functions of the company are described in detail in other articles of this jubilee issue.)

The presentation focused on Fingrid's capital investments in the grid. These have been used for securing the transmission capacity over a long term, anticipating the needs of the market. Timo Toivonen stated that this type of far-reaching approach is typical of the Finnish transmission system operator, and it should also become more common among the transmission system operators in the other Nordic countries.

Thanks to capital expenditure by Fingrid, the transmission capacity between Finland and Sweden has almost doubled in 10 years, and the completion of the Fenno-Skan 2 cable connection, which is presently being constructed, at the end of this decade will provide a considerable addition to it.

"At present, Finland and Sweden constitute a uniform market area for 93 per cent of the time, and the completion of the Fenno-Skan 2 sea cable will bring that figure to clearly over 95 per cent. The problems of the Nordic market are clearly in locations other than our western border," Timo Toivonen said.

The seminar had attracted about 100 representatives of Fingrid's customers and other main stakeholders at the auditorium of the National Museum of Finland.

Important decisions still need to be made, he said in referring to the programme presented by Nordel, the co-operation organisation of the Nordic transmission system operators, in the summer of 2004 for reinforcing the transmission connections within the Nordic market area.

In the past 10 years, electricity transmission capacity on Finland's eastern border has been boosted by 50 per cent. Timo Toivonen said that it is not possible to raise this capacity any higher in Southeastern Finland without compromising system security.

Fingrid's capital investments will continue to be extensive, because the grid is ageing and requires modernisation.

Other important and demanding future challenges for Fingrid include retaining the role of a trailblazer on the evolving European electricity market and accelerating developments on the Nordic market.

"Furthermore, in all Nordic countries there is a need to promote timely grid projects which are based on future needs. The system security of the Finnish power system and Fingrid's own operational efficiency have to be kept at the high level attained," Timo Toivonen listed Fingrid's objectives for the next ten years.

Grid operator and ideals of classical humanism

"Fingrid not only upholds the Finnish electricity transmission grid but also carries responsibility in society. The company aims to be a trailblazer in its business globally, but alongside this it also cherishes traditions." This is what **Anna Nurmio-Lahdenmäki**, marine archaeologist, stated at the beginning of her presentation. She guided the seminar audience to a fascinating world of another kind, taking the listeners over 250 years back in time, to the tale of the three-masted galliot St Michel and its treasures.

"The wreck is a versatile reflection of contemporary society and its ways of life. It allows researchers to study many things: technical achievements, trading, seafaring, botany, zoology, anthropology, or cultural history," she said.

By sponsoring underwater research and by publishing an illustrated reference book on the ship, Fingrid has contributed to shared cultural legacy really becoming shared.

The older generation of the energy business was also represented in the seminar. Shown in the photograph are former members of Fingrid's Board of Directors Juhani Ahava (on the left) and Juhani Pohjolainen (on the right). Kalevi Numminen is shown in the middle.

Anna Nurmio-Lahdenmäki said that Fingrid has shown that it works on a value basis where the fundamental ideals of classical humanism – goodness, truth and beauty – can be found in the very core. She added that a desire to head forward and to retain precious legacy to posterity are also included in the principles of humanism.

At the end of the seminar programme, the audience had an opportunity to learn to know the concise exhibition "S:t Mikael 1747" at the National Museum of Finland. The exhibition was presented by researcher **Ismo Malinen** of the Maritime Museum of Finland.

The distribution area of Vaasan Sähkö is bilingual, with Finnish and Swedish as the languages. "Some might think that this spells extra costs, but I think that it is a major resource," Hannu Linna says. Natural interaction across language barriers is a great thing which enriches the working environment, he adds.

Fingrid's Advisory Committee to have a new Chairman

Challenges involved in changes intrigue Hannu Linna

A steady pace forward may be something aspired by many enterprises. However, Hannu Linna, Managing Director of Vaasan Sähkö, is much more motivated by distinct turning points. He says that the foremost changes in his own career have been related to transitional periods. Fingrid's Advisory Committee will have a new Chairman at the beginning of 2007 – Hannu Linna, a man whose dominating feature is activity.

TEXT BY Maria Hallila PHOTOGRAPHS BY Ritva Välitalo and FutureImageBank

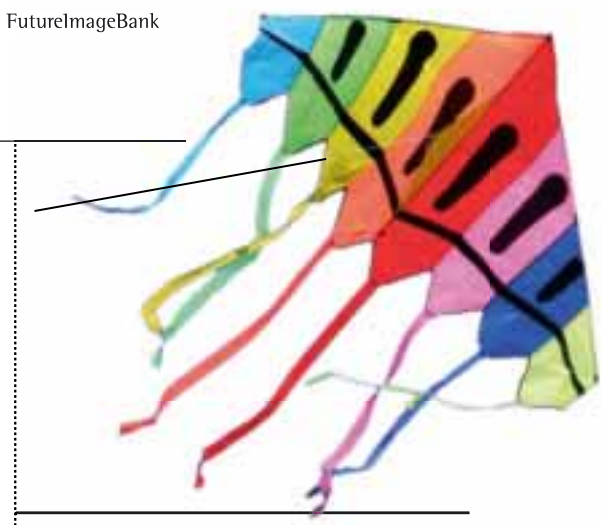

"The ability of people – and enterprises – to react to changes deteriorates if things run well and at a steady pace for a length of time," Hannu Linna argues.

In transitions, you need to take big risks, but the results of the correct solutions may be evident quite quickly, he says.

This has been the case at Vaasan Sähkö, a regional electric utility operating in Western Finland, where he has served as the Managing Director since 2001. The company's profit trend took an upward turn in 2002, and reached an excellent level in the next year. At around the time when the electricity market in Finland was being liberalised, before coming to Vaasa, Hannu Linna headed Korpelan Voima, another power company in Western Finland.

The inexpensive price level offered by Vaasan Sähkö has brought the company many new customers in recent years. "Our price may not be the cheapest in Finland continuously, but it is always among the lowest ones," Hannu Linna says.

In addition to an inexpensive price level, the objectives of Vaasan Sähkö include being regionally strong and operationally efficient. The corporate and management culture has been developed extensively to support the achievement of these goals.

Increased production boosted growth

Vaasan Sähkö acquires almost all of the electricity it sells from power plant companies owned by it through Etelä-Pohjanmaan Voima Oy (EPV) and from the Nordic electricity exchange Nord Pool.

"The ability of people – and enterprises – to react to changes deteriorates if things run well and at a steady pace for a length of time."

Hannu Linna describes Etelä-Pohjanmaan Voima as a strategic partner of his company. Vaasan Sähkö is its largest owner with a share of 40.8 per cent. EPV's electricity procurement sources are its associated companies Vaskiluodon Voima Oy, Teollisuuden Voima Oy, Rapid Power Oy and Pohjolan Voima Oy.

"Timely increase in our production shares has accelerated decisively the success of our company in recent years," Hannu Linna says.

He says that Vaasan Sähkö has doubled its production volume in less than 10 years.

"Our resources will grow further as the Olkiluoto nuclear power plant and Tornion Voima's plant for the combined production of heat and electricity, which will go on stream in the early part of 2008, will be ready."

Changes in the operating environment

While the future outlook of his own company looks promising, Hannu Linna is more concerned about changes in the operating environment of the business. He says that he is occasionally frustrated by the extensive role of regulation in the electricity business. He characterises the decision-making which influences the operating conditions of the business as unstable in many respects.

Linna likes to compare the competition and operating conditions of the electricity business to those of other industries, which he knows well having served in executive management in the prefabricated house and furniture industries for 11 years in the 1980s and 1990s.

"When the electricity market was liberalised in the mid-1990s, I returned to the energy business with enthusiasm. I was sincerely glad about this business becoming open to competition. In industry, I had learned to know the true meaning of competition, and this makes it difficult for me to accept now that the operating environment of the electricity business is subject to so many rules and their constant changes."

The distribution network of Vaasan Sähkö covers Vaasa, Mustasaari, Maalahti, Laihia, Vöyri and Korsnäs and small areas in Närpiö and Jurva. "For the past couple of years, our business has also encompassed the sales of broadband connections," Hannu Linna says.

"You sometimes notice that the decisions are made at the wrong level and that they have not been thought over from the market player's viewpoint. The impacts on individual enterprises may be unreasonable," Hannu Linna says.

He sees such unanticipated impacts which distort the market especially in emissions trading, where "the EU has assumed the role of a soloist in a global problem".

"Emissions trading has changed the energy business more than expected. It has raised the consumer prices of both electricity and district heat and influenced the competitive set-up. Emissions trading as a part of the price formation of electricity has undermined the credibility of a free electricity market. Emissions trading only concerns Europe and our electricity market is in practice only Nordic, even though the carbon dioxide problem is global," Hannu Linna says.

According to him, there are local attempts to correct distortions caused by regulation using various kinds of correction mechanisms and subsidies, such as the feed-in tariff intended to correct the weakened position of peat or by facilitating the terms of connection of small-scale electricity production to the distribution network.

"Just adding a patch on an old patch only results in more mistakes. The distortions should be corrected at the same level where the original decisions were made," he points out.

More transparency

An amendment of the Finnish Electricity Market Act, which will come into

force at the beginning of 2007, will also change the structures and operating conditions of energy utilities. According to the amendment, they need to separate their network business from other electricity business legally and operationally.

There are also requirements that this structural reform, which aims to prevent the cross-subvention of various businesses, should be taken even further, to the total separation of ownership as well. In the EU, Holland is implementing this type of strict separation.

However, Hannu Linna would not like to go this far in Finland in the name of securing free competition. He believes that present regulation is sufficient to guarantee the required transparency. In this respect, he shares the view of Eurelectric, the European co-operation organisation of the electricity business. He has served as the representative of Finns in Eurelectric for the past eight years, most recently as the deputy chairman of the Network Committee for three years.

On the other hand, he points out that Finland was actually way ahead of the present arrangement in terms of the separation of ownership before the large companies were given the right to acquire the distribution networks.

"At that point, I proposed that vertical integration of the business should be prevented," he says.

The structural change required by the amended act has already been implemented at Vaasan Sähkö: at the beginning of 2006, the electricity network business was transferred from the parent company to Vaasan Sähköverkko Oy.

Strong voice of the business

Fingrid's Advisory Committee, which consists of the representatives of electricity transmission customers in the Finnish grid, is an important forum for Hannu Linna. The Advisory Committee discusses shared topical issues in the business from the viewpoint of various types of players.

"Fingrid needs the voice of the business, and this voice is strong in the Advisory Committee," the new Chairman of the Committee says.

Involvement in the Advisory Committee has convinced him of the importance and functioning of this organ.

"It genuinely tries to find new approaches, and these efforts are sure to lay a foundation for the final solutions," he believes.

Hannu Linna feels that the most important duty of the Advisory Committee is to keep up to date. This year, the agenda of the Committee has comprised exceptionally heavy issues.

"We have discussed the sea cable from Russia and the power reserve situation extensively and profoundly," he says.

Hannu Linna says that the versatile composition of the Advisory Committee, which represents the various types of players, guarantees that many, also opposing, opinions are brought to surface. "If this wasn't so, the Advisory Committee would have no meaning," he emphasises.

Hannu Linna's chairmanship coincides at a period when, according to his own words, energy matters are more important than ever before. As if to underline the truthfulness of these words, yet another international power failure took place in the weekend preceding this interview: overloading in a part of the grid in Germany led to a disturbance impacting half of Europe.

"In Finland, the sufficiency and security of supply of electricity and related safety have been so good for 30 years that we occasionally forget what this all depends on. So as to retain the good situation, the aspect of security of supply must be the foundation of all solutions taken in the transmission grid and in the solutions of all electricity market players," Hannu Linna points out.

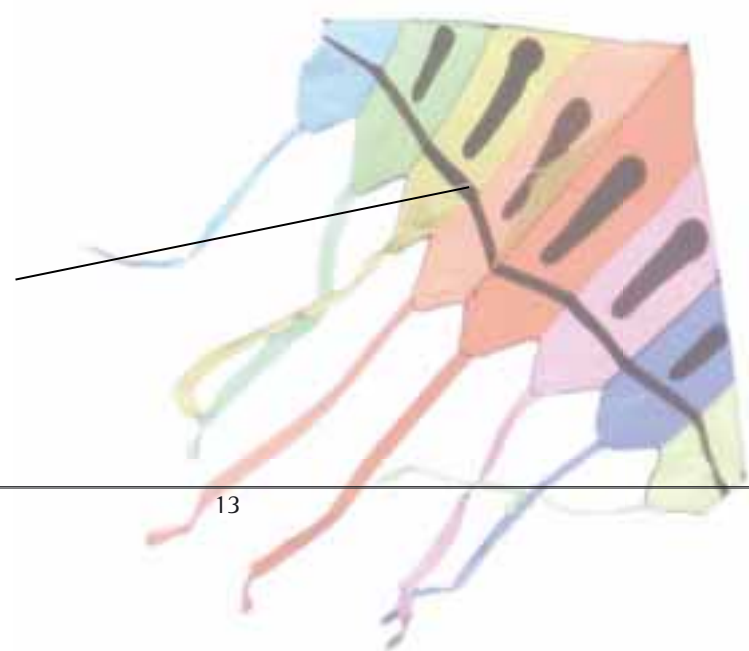

Steady course for Fingrid's finances

When Fingrid acquired the transmission grid businesses of Imatran Voima and Pohjolan Voima in August 1997, it was the biggest asset transaction in Finland by that date executed in cash terms, having a value of 1,139 million euros (6,770 million Finnish markkas). Arranging financing for the transaction was a major challenge for the recently-founded company. In ten years, Fingrid's corporate finances have stabilised, and its equity ratio has grown from the initial 10 per cent to a level of 25 per cent.

TEXT BY Tom Pippingsköld PHOTOGRAPHS BY SXC

When Fingrid commenced its actual business on 1 September 1997, the sellers of the grid – Imatran Voima Oy, IVO Voimansiirto Oy and Pohjolan Voima Oy – were paid a total of 209 million euros (1,240 million markkas) as part of the purchase price. These funds came in the form of equity and from the 30-year capital notes issue.

For the remaining part of the price, 930 million euros (5,530 million markkas), the sellers gave a term of payment

until 30 May 1998. Fingrid set an objective to arrange its own funding quickly, and consequently paid the last instalments of the remaining purchase price to the sellers on 30 December 1997.The ambitious objective was met, but how did it all happen?

Equity financing

Fingrid's capital structure was determined by the charters of the company. In accordance with these, the equity ratio must be at least 20 per cent. When Fingrid started its business, the equity of the company was composed – in addition to the share capital – of a share premium account and capital notes. The share capital consisted of series A and B shares. The owners of the series A shares were the founding shareholders: Imatran Voima Oy (presently Fortum Oyj), Pohjolan Voima Oy and the Republic of Finland. As a result of lengthy negotiations, prominent Finnish pension, life and non-life insurance companies became the shareholders of the series B shares. The share capital and share premium account accumulated to a total of 112 million euros.

In its founding stages, the company utilised a debenture of capital note nature and issued capital notes worth 138 million euros on 1 September 1997. This was a significant financing operation in those days, because in accordance with the amendment of the Finnish Companies Act, which came into effect on the same day, the capital notes could be included in the company's equity.

The tenor was 30 years, but the terms of the capital notes included an option to call the notes on 15 May 2007 and 15 May 2017. The capital notes were arranged through a tender procedure, and they were oversubscribed 1.5 times, which indicated the interest of investors in the company even before it had commenced ordinary business operations.

Debt financing

Since the company aimed to pay back the remainder of the purchase price to the owners quickly and launch the company's own funding, it signed a 7-year syndicated revolving credit facility of 390 million euros with an international and domestic banking group in August 1997.

In November 1997, the company established a domestic Medium Term Note Programme and launched two serial bonds. These bonds were arranged through a tender procedure and they were also oversubscribed, almost two times. The amount issued within the bond maturing on 15 September 2001 was 61 million euros and the amount issued within the bond maturing on 18 April 2006 was 32 million euros.

Moreover, the company agreed with the Nordic Investment Bank (NIB) on a credit facility of 84 million euros. A loan was also obtained from the European Investment Bank (EIB), although it was not withdrawn until the spring of 1998.

In the autumn of 1997, the company signed both a domestic Commercial Paper Programme and a Euro Commercial Paper (ECP) Programme. At the end of the year, it had 346 million euros worth of commercial papers issued under both the domestic and ECP Programme.

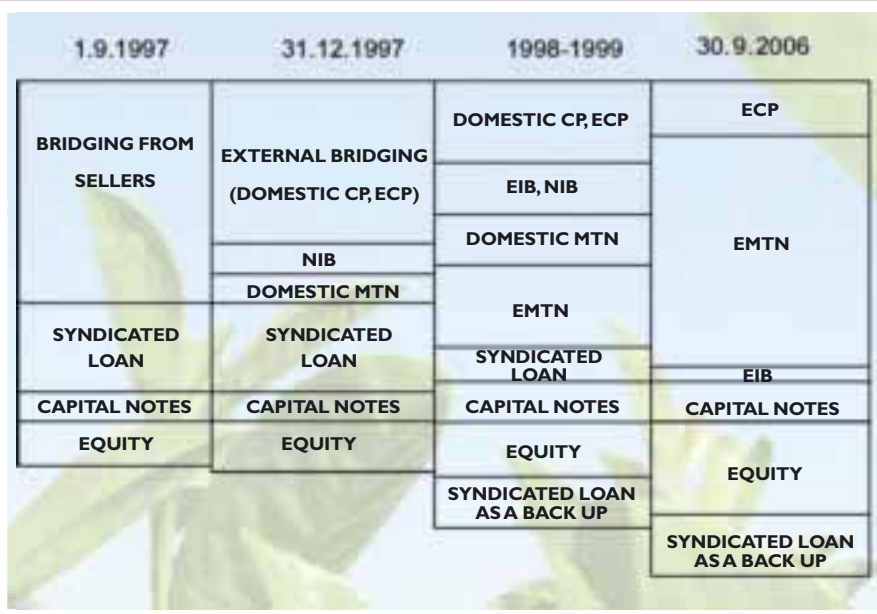

Figure 1. Trend in Fingrid's capital structure 1 September 1997 - 30 September 2006

Remainder of the purchase price paid

At the end of the first financial year, the company hence had 250 million euros of equity financing, 568 million euros of loans withdrawn from international and domestic investors and banks, and 346 million euros of commercial papers, all these totalling 1,164 million euros.

In this way, by the end of December 1997 the company had arranged all financing required by the business acquisition, and it paid the sellers the remainder of the purchase price by 30 December 1997.

Credit rating and changing of capital structure

As early as when founding the company, it was clear that it will acquire an international credit rating in order to better utilise the international money and capital markets.

In order to achieve a high rating, it was necessary that the equity ratio was at a sufficient level. This is why the company utilised the capital notes in the formation of its capital structure, because in those days capital notes could be included in equity in the balance sheet.

When the company had launched its own funding in the autumn of 1997 and after the first financial year was behind, it was time to apply for an international credit rating. Moody's Rating Services assigned Fingrid a rating of Aa3 and Standard & Poors (S&P) a rating of AA in the spring of 1998.

Later, in November 1998, S&P lowered its rating slightly to AA-, because at that point the Rebublic of Finland decided to cut down its ownership in the recently established Fortum Oyj, which was a major shareholder in Fingrid.

Since then, Fingrid has had the same unchanged credit ratings of Aa3 and AA- from Moody's and S&P respectively.

In the spring of 1998, the company had signed a frame contract for a Euro Medium Term Note Programme (EMTN) with a dealer group consisting of international and domestic banks. Earlier, the company had already issued approx. 100 million euros worth of domestic bonds. However, the objective was to diversify the funding sources further by entering the international capital market so that the high credit rating could be utilised better, i.e. having a lower margin and on the other hand being able to extend the debt repayment profile.

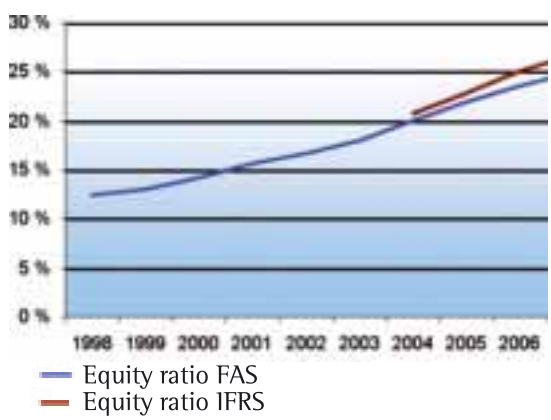

Figure 2. Trend in Fingrid's equity ratio (excluding capital notes).

Then changing almost the entire debt structure from the original bank-focused funding to primarily bond funding took place next, between 1999 and 2001.

After Finland started to use the common currency of the EU area, the euro, Fingrid was the second company in Finland to launch a public bond in euros in February 1999.

Due to the public euro emission and a high credit rating, the company was able to pay back the bank loans in a very short period of time and borrow directly from investors, primarily from international life and pension insurance companies and from bond funds by issuing bonds.

At present, Fingrid has outstanding approx. 650 million euros worth of bonds issued under the international EMTN programme (see the figure on the previous page).

Risk management challenges

A high proportion of debt, and with the debt being withdrawn in many different currencies, required solid financial policy to control the financial risks. In accordance with Fingrid's financial policy, foreign exchange risks were hedged fully. The goal of interest rate risk management was to proportion the interest rate risks of the entire balance sheet to the applied tariff policy as well as possible.

When Fingrid started its operations, the interest rates were in an upward trend and it was necessa-

ry to stabilise the corporate finances. The company reduced the risks resulting from future interest rate fluctuations by doing interest rate swaps and by borrowing partly at fixed rate.

Fingrid attained a position as a reliable and expert partner of its customers when the actual operations of the company were stabilised in a few years, and its own finances developed positively by accumulating the earnings. It was hence possible to reassess the financing opportunities in a more established operating environment.

The above-mentioned bond-focused financing and changing the entire debt financing of the company from fixed rate based to floating rate based were the results of these reassessments. In this way, the company also benefited when the high level of interest rates finally took a downward turn in 2003.

The interest rate risks are managed primarily so that when the interest rates are low, the company can hedge 70 per cent of the interest costs over the next five years, and when the interest rates are high, the hedging level is only 30 per cent.

Stable finances

Fingrid has adopted the International Financial Reporting Standards (IFRS) in its financial reporting. Companies issuing public securities must adopt these standards no later than during the financial year of 2007. Since institutional investors are a vital stakeholder for Fingrid both as an owner and financier, the company's Board of Directors decided in 2003 that the company will adopt IFRS reporting as early as 2005, i.e. at the same time as most Finnish listed companies.

Today, Fingrid's finances are stable, and the goal is to retain the equity ratio at approx. 25 per cent (FAS).

Demanding duties still left

In view of finances and funding, Fingrid's foremost challenges include management of interest rate risk as well as management of price and volume risk resulting from loss energy purchases. The management of both of these applies a similar philosophy: the goal is to hedge the next few years.

Fingrid's tariff policy stems from a principle according to which the company does not aim to include potential future risks in its tariff in advance, but pricing is based on the present cost level, and momentary market changes can be covered temporarily by means of the price flexibility allowed by the contracts, if such disturbances occur.

Moreover, since interest expense and loss energy costs have a major impact on corporate finances, Fingrid's hedging policy and improved equity ratio provide the necessary "buffer" if surprising changes were to emerge on the market in the future.

Fingrid's capital investments anticipate the NEEDS OF CUSTOMERS AND MARKET

Fingrid has two main considerations in the development of the transmission grid. One is attending to the customers' present and future transmission needs at a high level of system security, and the other is promoting the functioning of the electricity market by reinforcing the transmission capacity of the grid, anticipating market needs. Moreover, safety requirements must naturally be considered.

TEXT BY Teuvo Kortesoja PHOTOGRAPH BY Juhani Eskelinen

During its ten years of existence, Fingrid has used a total of approx. 300 million euros in capital investments in the grid, based on increasing electricity consumption, ageing of the grid, and connection of new power plants.

The Finnish grid has been reinforced as follows:

- 400 kilovolt lines	600 km
- 110 kilovolt lines	500 km
- new transformer substations (400 kV)	8
- new transformer capacity (400 kV)	6,000 MVA.

Extent of the Finnish grid at the end of 2006:

- 400 kilovolt lines	4,400 km
- 220 kilovolt lines	2,300 km
- 110 kilovolt lines	7,500 km
- transformer substations (400 kV)	30
- transformer capacity (400 kV)	15,600 MVA.

Grid development programme ensures system security

During the past ten years, the Finnish transmission grid has not had a single disturbance with extensive consequences. The outage period experienced by consumers as a result of grid faults has remained at a level of a couple of minutes (Figure 1). The outages are mainly caused by climatic factors.

The company maintains a constantly up-to-date grid development programme, which aims to secure reliable electricity transmission to the customers also in the future. During the next six years, a total of some 1,100 kilometres of transmission lines will be constructed in Finland. About 400 kilometres of these will be 400 kilovolt lines and some 500 kilometres will be 110 kilovolt lines. Moreover, the 220 kilovolt grid in Northern Finland will expand by approx. 200 line kilometres.

Fingrid's goal is to build the new lines in conjunction with existing lines due to environmental considerations. Some 600 kilometres of the new lines will be constructed in existing rights-of-ways, about 400 kilometres parallel with present lines, and only approx. 100 kilometres will be built on completely new routes.

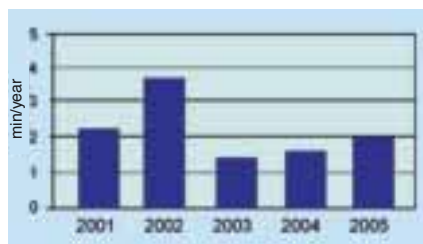

Figure 1 Reinfrocements of Finnish grid 1997 - 2006

Fingrid's capital expenditure in transmission lines and substations in Finland will total approx. 65 million euros per year in the coming years.

Total interests of the market have priority

When Fingrid was being founded, one of the objectives imposed on it was that the company is to promote the functioning of the electricity market so that the total interests of the market are given priority over the company's interests when developing the grid. Accordingly, Fingrid has increased transmission capacity both on Finland's western and eastern border based on this obligation which was later also recorded in the Electricity Market Act.

The most important projects which have boosted the transmission capacity across the border between Finland and Sweden have comprised the series compensation of 400 kilovolt AC connections between the two countries, series compensation of north-to-south 400 kilovolt lines in the grid in Finland, and upgrading of substations having bearing on the transmission capacity. The transmission capacity of the existing sea cable link has also been increased.

The transmission capacity will grow further significantly when the second sea cable link to Sweden, which is under construction, will be ready at the end of this decade. Figure 2 shows the impact of the investments on the transmission capacity across the western border of Finland.

The transmission capacity on the eastern border of Finland grew by 50 per cent when the third 400 kilovolt transmission connection between Russia and Finland was commissioned at the beginning of 2003. This also necessitated the reinforcement of the 400 kilovolt grid between the Helsinki and Kymenlaakso regions.

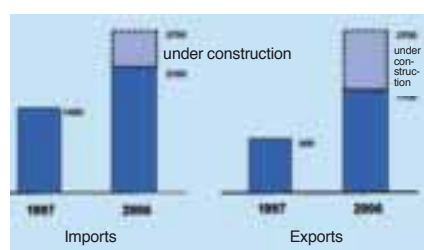

Figure 2 Transmission capacity on the western border of Finland (MW)

The technical reliability of the two

transmission connections originally built in the 1980s has been improved considerably as a result of good co-operation with Russians. The connection arrangements have split the imports into two parts which are independent of each other. It has hence been possible to raise the transmission capacity to its present maximum value of 1,300 megawatts. Figure 3 shows the impact of these investments on the transmission capacity across the eastern border of Finland.

When also considering the Fenno-Skan 2 link which is under construction, Fingrid's total capital expenditure in raising the cross-border transmission capacities is approx. 200 million euros. These projects have elevated the available transmission capacity from approx. 2,000 megawatts to 4,000 megawatts. This corresponds to some 25 per cent of the peak load electricity consumption in Finland. The target in Continental Europe in this respect is a level of approx. 10 per cent.

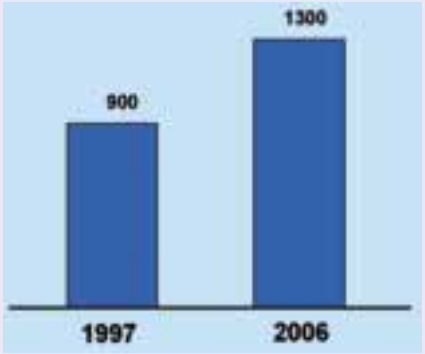

Figure 3 Transmission capacity on the eastern border of Finland (400 kV, MW)

Fenno-Skan 2 to reduce market restrictions to a minimum

During the past ten years, some 600 kilometres of 400 kilovolt lines have been constructed in Finland. The net increase in the 330 – 400 kilovolt grid in Norway has been just under 400 kilometres. In Sweden and Denmark, the additions to the 400 kilovolt grid have been very small.

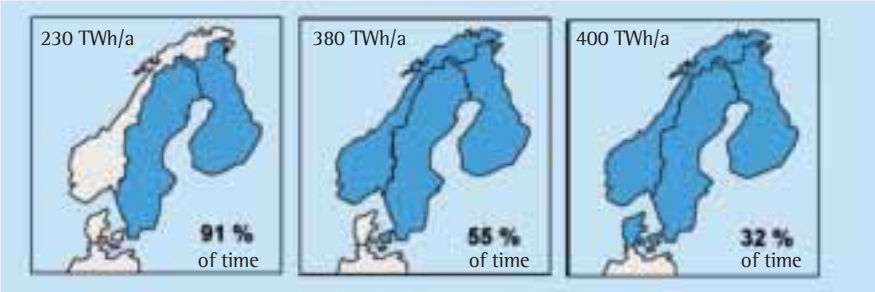

Figure 4 Size of uniform market area and share of uniform market price of total time.

Insufficiency of investments in the other Nordic countries is reflected negatively in the market. The impact of the grid on the market mechanisms can be illustrated by the period of time during which the market on both sides of the border remains uniform. The actual situation in 2005 is shown in Figure 4.

The investments made in the cross-border capacity between Finland and Sweden have decisively decreased the length of time during which Finland is separated as a price area of its own. At present, such restrictions typically account for approx. 5 – 10 per cent of time.

Once the new sea cable link between Finland and Sweden is ready, it is possible to go clearly below the level of 5 per cent, which is Fingrid's goal. In this case, the market will be restricted in extreme situations only. The investments required to eliminate these remaining restrictions are no longer sensible in view of national economy.

It appears that once Fenno-Skan 2 is ready at the end of this decade, there is no more need to raise the transmission capacity between Finland and Sweden because of the needs of the electricity market. However, Fingrid and Svenska Kraftnät have plans for a third 400 kilovolt AC connection between Northern Finland and Northern Sweden. The transmission capacity of the two cross-border connections commissioned in the 1970s is fairly low, and it is problematic to arrange outages on them. A long-term outage on one of the lines translates into a considerable restriction in the transmission capacity made available to the market. However, the third connection would not really increase the total capacity offered to the market.

Fingrid has spent more money in the grid than the other Nordic countries. Despite the extensive investment programme, the price level of grid transmission in Finland has decreased by almost 40 per cent in real terms even though at the same time the company's equity ratio has been raised from the initial 10 per cent to the target level of 25 per cent.

Fingrid's investments in the grid will also continue to be extensive. During the next six years, more than 1,300 kilometres of new transmission lines will be constructed in Finland. Moreover, the reserve power capacity built in the 1970s will require extensive renovation and replacement in the next ten years.

Despite these investments, Fingrid intends to retain the stability of both the price level of grid transmission and its equity ratio.

Mere forecasts are not sufficient

Grid planning calls for close co-operation

Long-term grid development calls for good and close interaction with the customers and the other Nordic transmission system operators. The objective is that the necessary grid projects can be executed in a controlled and timely manner.

TEXT BY Pertti Kuronen PHOTOGRAPHS BY SCX

The typical execution period of a transmission line project is presently five years or more. Industrial units and power plants can be completed in less than two years. These facts were the starting point when Fingrid launched confidential and increasingly thorough customer co-operation in 2002 for the development of regional grid planning. As such, these efforts have long traditions.

Regional development needs

As a practical measure, the Finnish grid was divided into 13 regions based on grid structure and geographical factors. Discussions were conducted with customers in each region concerning the needs to develop the grid as well as anticipated consumption and production volumes.

The grid development needs were compiled in a regional plan where individual issues were not distinguishable. Once the regional plan is ready, confidential grid plans for each customer will be drawn up together with the customer.

Initial planning revealed clear benefits

The first phase of planning, which took three years, was completed in 2005 in all 13 regions. This procedure turned out to be very useful to both Fingrid and its customers.

This phase did not reveal actual severe problems, but, for example, it was a surprise that electricity consumption in Lapland will grow faster than expected.

The Finnish grid has been divided into 13 regions for the planning of the transmission grid.

This is why Fingrid launched an extensive 220 kilovolt line project from Rovaniemi via Kittilä to Vajukoski in Sodankylä, including the necessary substations.

A new round of planning will start at the beginning of 2007, and the objective is to go through all regions at intervals of about five years.

Needs of the electricity market extend beyond Finland

The electricity market is already open in the Nordic countries and it is also opening in the other parts of Europe. In view of the transmission grid, the challenges concern cross-border transmission needs and the other parts of the 400 kilovolt grid. Naturally, reinforcements in the highest voltage levels serve all customers connected to the transmission grid.

The first grid plan covering the entire Nordic market area was completed in 2002. The plan was drawn up in close co-operation between all Nordic transmission system operators.

The analysis brought to surface five foremost Nordic grid projects which can be used for responding to the challenges of the electricity market of the 2010s. One of these projects is the ongoing construction of the second sea cable link between Finland and Sweden. This project due to be ready in 2010 will raise the transmission capacity by 800 megawatts. The transmission capacity of the present sea cable is 550 megawatts.

Nordel has already launched the next stage of analysis of what is needed in the Nordic grid after the completion of these five projects.

Increasing unit sizes in power production

Ten years ago – like still today – the largest power plant units in Finland were located at Olkiluoto in Western Finland. These units originally had a power of 710 megawatts, but subsequent modernisation has elevated the power to more than 850 megawatts. We are now facing a new step when the new Olkiluoto 3 unit, due to be commissioned in 2010, will be connected to the grid at a power of 1,600 megawatts.

Adapting Olkiluoto 3 together with the Finnish grid has been a long-term and challenging duty. In all, the various analyses have taken about five years. They have examined and developed very detailed issues concerning the reinforcement of the grid as well as the structures and regulation properties of the plant. The end result is a solution which ensures continued system security of both the power plant and of the transmission grid.

The co-operation conducted has been constructive and close, based on mutual trust. The connection of the plant to the grid employs highly innovative solutions, such as so-called system protection which can be used for shedding 300 to 400 megawatts of loads primarily at groundwood plants and refiner mechanical pulp plants simultaneously if the new power plant unit is disconnected from the grid. In this way, the Olkiluoto 3 power plant unit is "reduced" to a size of 1,300 megawatts in view of its impact on the grid. The implementation of system protection has been enabled by positive co-operation with Finnish large-scale industries.

Priority cross-sections in the Nordel grid, agreed in the summer of 2004

1. Fenno-Skan 2, project in progress, complete in 2010
2. Connection between Central and Southern Sweden (Sydlänken), decided, technical solution undecided, complete in about 2013
3. Nea-Järpströmmen, decided, complete in 2009
4. Skagerrak 4, no decision
5. Great Belt, decided, complete in 2010

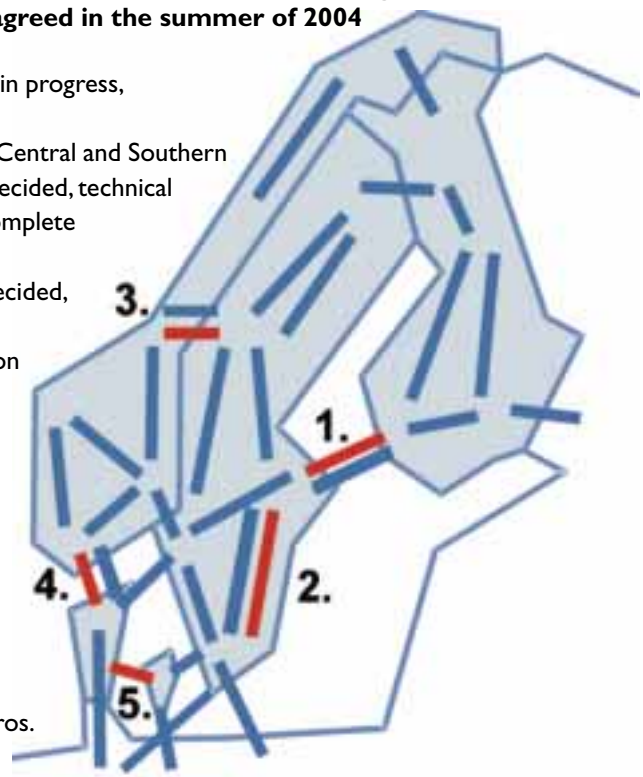

Total capital investments approx. 1,000 million euros.

Grid Code secures system security

The earlier plans and dimensioning principles used as the basis of grid operation have now been compiled in a Nordic Grid Code. One component in this Code are the shared terms and conditions for connection to the grid. The Nordic Grid Code is published on the Internet at Nordel's home pages.

Fingrid has revised the general connection terms and the specifications for the operational performance of power plants, based on the Grid Code. These will be taken into use in new and renewed contracts as of the beginning of 2007, after confirmation by the EU. The terms of connection as well as the technical system requirements are supplemented by separate guidelines which facilitate the engineering of the customer's connection. Particular attention has been paid to ensuring the mutual functioning of industrial connections.

The engineering and operating principles applied have resulted in a very high system security both in Finland and in the other Nordic countries. The theoretical likelihood of a major disturbance in the present grid is in the region of once in 30 years.

Fingrid intends to retain the good level of system security also in the future. This is one of the main principles of grid development.

FROM GOOD TO EXCELLENT

Fingrid has succeeded in its objective to improve the general grade for its performance, received through customer feedback. At the turn of the millennium, the grade was just above 8 on a scale from 4 to 10. After that, customers have rated Fingrid's grid service with an excellent grade in several consecutive years.

TEXT BY Matti Tähtinen PHOTOGRAPH BY Gorilla

Customer satisfaction

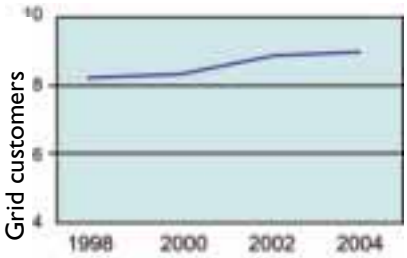

Scale of grades: 4 to 10

Close co-operation between customers and other stakeholders on one hand and Fingrid on the other hand was perceived as important as early as when the company was being founded. The Advisory Committee was established to serve as the forum of co-operation. The Advisory Committee brings forward the customers' views and also supervises Fingrid's performance. Customer satisfaction is measured regularly.

In the customer satisfaction survey in the spring of 2000, customers rated our performance with a grade of just over 8 on a scale from 4 to 10. We set a new vision for customer relations: we should earn an excellent grade, i.e. 9 or 10, from our customers.

The main ideas of strategy were flexible customer-oriented service, fruitful operative co-operation, and efficient interactive data exchange. The success factors were in-depth customer knowledge, management of change, skills for natural co-operation, proactive contacts with customers, and broadminded utilisation of new customer service approaches.

The most essential practical action consisted of making the customers extensively involved in the preparation of the grid tariff that was to be revised for 2002 to 2004, and development of in-

Pricing structure of main grid service in 2007

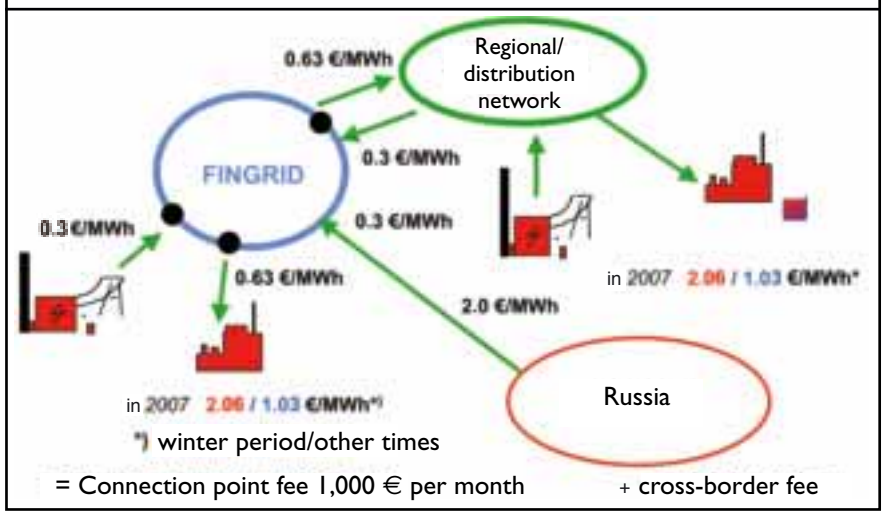

teractive operating models both in customer service and regional grid planning.

Challenges of monopoly status

At a round the same time, an editorial with the heading "Impartiality makes no compromises with theory" was published in this magazine. The article discussed the challenges involved in the sales of grid service from the protection of a monopoly status. The main content of the article was summarised in three paragraphs:

"Fingrid is the only seller of grid services in Finland. According to the traditional thinking pattern, this would mean that Fingrid does not have to do any sales work; after all, there is no competition, either. This is how it is in theory, but only in theory.

What Fingrid sells is an impartial grid service with equal service and price terms. This also involves selling a compromise to the entire clientele. Functional compromise solutions absolutely require that the customers and other market parties have trust towards Fingrid. - -

The combination of impartiality and a monopoly status is subject to almost natural doubt, which means that attaining trust requires both high-quality and comprehensive customer efforts. In view of Fingrid's good operational and financial results, the input in long-term customer co-operation has paid off."

The word of the customers weighs

We had a simple principle when we were building the structure of pricing applied to the grid service: the customers decide.

Initially, the grid fees concerned production and consumption in equal proportions. When the next three-year tariff period was being planned, it was stated that there is no reason to circulate the grid costs via the price of electricity, so the fees were allocated almost entirely to consumption.

Another main reason for the change was the stabilisation of the company's income flow when the cross-border fees on the Nordic connections were removed.

After this, the main issue in the tariff structure has been how the smaller grid burden caused by regional production and customers who use electricity over a long period of operation should be taken into account.

Fingrid's customers are presently quite satisfied with the structure of grid pric-

Trend in transmission price, %

The front page of Fingrid's Extranet site shows how diverse issues are covered by corporate functions.

ing, which is why there are no structural changes in sight.

The operating model applied by Fingrid has enabled an almost 40 per cent reduction in the real price of grid service over the past 10 years. The price level of grid service in Finland is hence the most inexpensive in all Europe.

Listening and discussing

Throughout its history, Fingrid has founded its relationships with its customers and other main stakeholders on specialists and on an expert approach. We wish to endorse an open dialogue and to provide an opportunity to assess our operations, no matter whether we are dealing with network plans drawn up together with the customers, routes of transmission lines, substation contracts, or clearing of faults in the power system.

Fingrid's Advisory Committee, which consists of the representatives of our customers and other market players, has done pioneering work as a promoter of interaction. We have applied the same model to the development of power system operation and network operation, and most recently to the promotion of power system technology and expertise as well as stakeholder relations pertaining to environmental considerations and official matters. As many as some 60 representatives of our customers and other stakeholders participate in the work of our various committees.

We have received good feedback, both from within and outside our business, of the quality of our electronic services. At present, we are upgrading our Extranet pages intended for our stakeholders so that these pages will be even more comprehensive and user-friendly.

Successful choices

When comparing the mode of operation and organisation of Fingrid's customer interface to other transmission system operators, two significant differences can be found. First of all, from the very beginning, the customer interface in our company has been the responsibility of a specific organisational unit, and appointed customer service managers take care of the customer relations.

Another difference is that we do not have a specific department or function just for regulatory matters and regulatory authorities, as is the case in many other countries.

It is to be hoped that we can continue to focus on and trust the views of our true regulator – all our customers – and hence secure the total interests of the Finnish society on the evolving electricity market.

In many consecutive years, the grade obtained by us through customer feedback has been 9, which is considered as excellent. This encourages us to proceed on the chosen path also in the next decade.

High system security

requires constant preparations for the worst case scenario

The system security of the Finnish grid has been at an excellent level for a length of time. There have been occasional extensive blackouts in other parts of the world, but Finland has not suffered from them. The most recent major disturbance in Finland took place more than 30 years ago. The engineering and operating principle applied to the Finnish power system is to make preparations for the worst possible single fault at any given moment.

TEXT BY Reima Päivinen
PHOTOGRAPHS BY Juhani Eskelinen

During the past ten years, disturbances in the transmission grid have caused an average outage of only a couple of minutes per year to consumers. This has been achieved as a result of persistent development work.

Of course, all power systems involve a risk of a major disturbance if faults exceeding the dimensioning faults occur in them.

Model of two control centres

When Fingrid started in business, power system operation was considered as one of its core areas in the implementation of system responsibility.

The Power System Control Centre was located in conjunction with the company's head quarters in Helsinki in 1998.

The main duty of the Power System Control Centre is to ensure the functioning of the Finnish power system in all situations. Other important duties in view of the market are congestion management and taking care of the balance between electricity production and consumption in the whole of Finland.

A significant reform in system operation was carried out in 2001, when seven regional and local control centres were closed and regional operation control was centralised in the Network Control Centre established in Hämeenlinna. The Network Control Centre is responsible for the control of the 110 kilovolt network and for the planning and implementation of all switching relating to service outages. The model of two sep-

arate control centres secures sufficient readiness for surprising crises.

Inter-Nordic security

An important cornerstone for power system operation in Finland is provided by the inter-Nordic System Operation Agreement, through which the transmission system operators in Sweden, Norway, Denmark and Finland agree on the principles applied to the operation of the Nordic power system.

The agreement lays the foundation for shared procedures in system operation and frequency regulation and promotes significantly the efficient use of resources for instance in view of reserves required by fault situations.

Reserve power through purchases and contracts

In 1999, Fingrid acquired a total of 672 megawatts of gas turbine capacity in its direct ownership or in its control through access rights contracts. The gas turbines are needed as fast reserve in disturbance situations.

There are bilateral long-term contracts with power plant owners and industries on reserves required by the maintaining of frequency. One important feature has been the opportunity to agree on the use of shedded industrial loads as reserves for the power system. The contracts extend as far as to 2015.

Market efficiency through transmission capacity additions

The liberalisation of the electricity market has been reflected in the increasingly efficient use of the grid. The transmission situations between Finland and the other Nordic countries have varied drastically on the basis of the prevailing water reservoir situation and market price of electricity. Fingrid has used significant capital investments to add to the transmission capacity in recent years. As a result, it is only rarely that Finland is separated into a price area of its own because of insufficient transmission capacity.

The transmission lines and substation equipment need occasional repairs and maintenance. It is challenging to schedule the outages so that they cause a minimum of disturbance to the market.

The Network Control Centre in Hämeenlinna is responsible for the control of the 110 kilovolt network and for the planning and implementation of all switching relating to service outages. Shown in the photograph are Network Control Centre operators Kati Koivunen and Juha Tirri.

Balance service rules work well

The scope of Fingrid's system responsibility was expanded in 1999, when balance responsibility was also added to it. Fingrid assumed responsibility for maintaining a continuous balance between electricity production and consumption in the whole of Finland and for drawing up a nation-wide balance settlement after each hour.

An important milestone in power balance management was achieved in 2002, when the inter-Nordic regulating power market started in full scale. Since then, players in the various Nordic countries have been able to participate in the regulating power market, and the Nordic regulating power resources are used efficiently on a market basis.

The present balance service rules and pricing mechanism for balancing power were created during the contract period for the year 2000. The goal has been to make it reasonably easy for a player to enter the electricity market and to become a balance provider, considering the aspects of cost correlation and matching principle.

The present balancing power model has turned out to be good, and the use of balancing power has stayed at a low level. Only minor changes have been made to the contract terms over the years.

An excellent accuracy was reached in a couple of years in balance settlement, i.e. in the nation-wide settlement of electricity transaction volumes. The volume of unsettled balancing power is only a few megawatt hours per month.

The deadlines applied to the settlement procedure were shortened from the deadlines required by authorities through a contract between the balance providers and Fingrid, without compromising the accuracy of the settlement. The nation-wide balance settlement is completed in less than two months.

Up-to-date operation control tools

The operation control system supplied by an American company in the mid-1990s was very progressive in its days, and it has been a reliable control tool for ten years. The operation control system was later complemented by a separate simulator, which has been used for practising ordinary operation situations and also the clearing of serious and very rare disturbances, both among our own personnel and together with customers.

The operation control system will be upgraded extensively in early 2007, after which it will serve control rooms and Fingrid's experts even better for many years to come.

Fingrid's Internet pages provide information on issues such as the real-time electricity production, consumption and transmission situation in Finland.

State of the power system interests the players

Fingrid shows the real-time electricity production, consumption and transmission situation on its Internet pages. The page showing the state of the power system is by far the most popular choice on Fingrid's Internet pages, also among parties other than the electricity market players who need it in the management of their power balance. Especially in the winter peak load situations, the number of visitors on this page grows manifold.

Volume of transmission losses to a minimum

Transmission of electricity in the grid in Finland causes annual losses of approx. 1 terawatt hour, which is just over 1 per cent of electricity consumption in Finland.

Fingrid purchases the loss energy for its grid from the electricity market, primarily from the electricity exchange. The purchases apply a cautious principle, with the purchase price hedged well in advance. The goal is to minimise the volume of losses in grid operation so as to reduce the costs, still not jeopardising system security.

Good co-operation brings benefits to all

System operation is based on the co-operation of various parties. Close co-operation with the customers' operating organisations in Finland together with Nordic co-operation are a precondition for continuously good system security. Co-operation with the Russian party and future co-operation with our Estonian colleagues are important in terms of fluent system operation and provisions for disturbance situations.

Not a sprint but a STEADY MARCH TOWARDS A GENUINELY FREE ELECTRICITY MARKET

TEXT BY Juha Kekkonen PHOTOGRAPH BY FutureImageBank

The early phases of electricity market liberalisation probably gave an unrealistically optimistic idea of the reform. It seemed that the objectives were attained quickly and easily. However, maybe what we are actually dealing with here is a long march before the centennial monopoly is turned into an open, well-functioning market.

Facilitating the mechanisms of the electricity market is one of Fingrid's main duties. The company would not even exist had the market not been opened, which resulted in a need for a neutral transmission grid service.

The Finnish and Nordic electricity market is already well advanced, and we have been assisting other European countries as they have got under way. More and quicker results were probably achieved in the early phases of the reform than in recent years. The functioning of the market, which attracted general satisfaction for quite some time, has been subject to increasing criticism lately.

First steps of market freedom

In view of the market, one of the first important issues for Fingrid was the transfer of nation-wide balance management to the recently founded grid operator. The principles of balance service became transparent and equal to all. This made market access easier.

The expansion of the spot electricity exchange from Norway and Sweden to Finland was also among the foremost steps in the early stages. This required rearrangements in the duties, structures and ownership of the Norwegian-Swedish Nord Pool and the EL-EX exchange, which worked in Finland. The Elspot market was opened in Finland in 1998, which was followed by the removal of cross-border tariffs from our Nordic borders.

It took several years before the organisation of the Nordic electricity exchange reached its present set-up. The electricity exchange is based on Nord Pool Spot which caters for the exchange trade of physical electricity and which is owned by the Nordic transmission system operators (TSOs). In practice, its spot market determines the daily price of electricity. EL-EX's product was modified into an Elbas intraday market which also covered Sweden and has since expanded to Denmark. Moreover, the TSO's arranged a separate market place for regulating

European Transmission System Operators (ETSO)

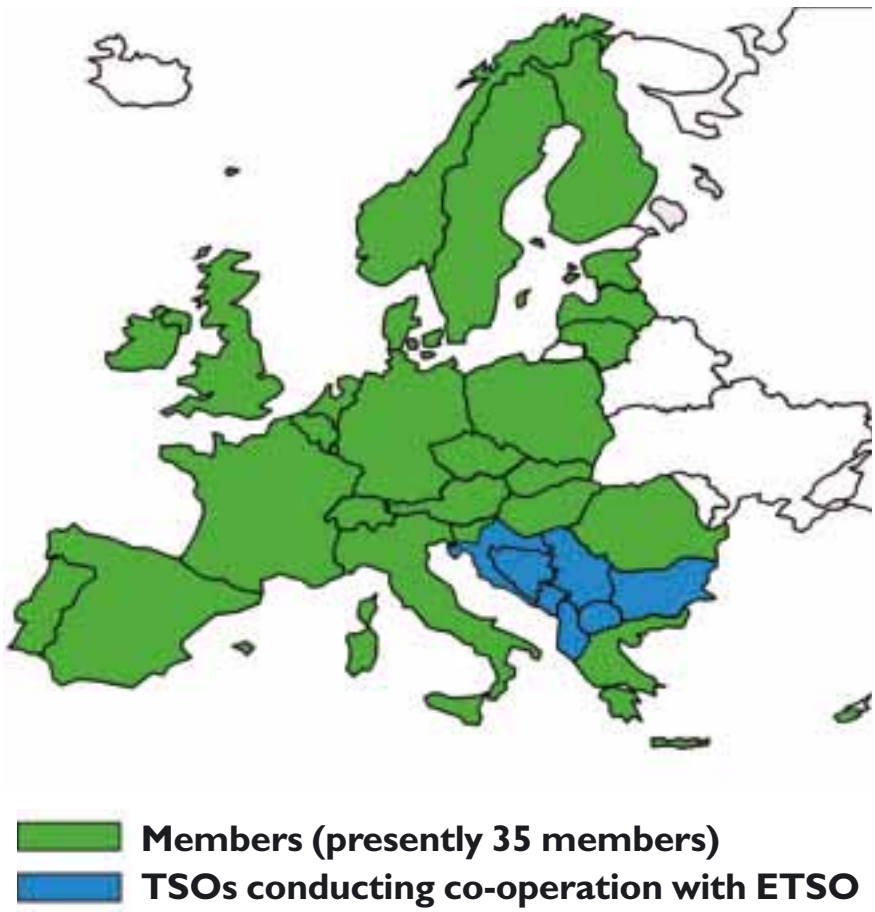

power which they need during the ongoing hour.

Alongside the electricity exchange, there is also bilateral physical trade. Derivative products both on the OTC market and on Nord Pool ASA's exchange are available for price hedging. Nord Pool ASA is also an important clearing house.

Harmony and transparency

The TSOs have attempted to remove the restrictions of electricity trade not only by reinforcing the grid but also by harmonising the rules and practices between the Nordic countries.

Fingrid's capital investments are discussed in another article in this magazine. Nordic harmonisation has concerned issues such as transmission tariffs, which are rather uniform for electricity producers within a certain range. The allocation of transmission capacity to electricity trade is mainly uniform.

The most recent harmonisation project concerns the cost basis and pricing of balance service. This would also pave the way for a Nordic retail market, which is a political objective. Households can presently choose their supplier, but only between those operating in one's own country.

Transparency is a characteristic trait of the Nordic market as compared to the situation prevailing in the other parts of Europe. Sufficient and identical availability of market information is vital for market credibility and for a level playing field.

There is much information available on the TSOs' Internet pages and especially on Nord Pool's website. However, the large players naturally have more market information at their disposal than the smaller players, and there is still work to be done to improve transparency.

Nordic market provides an example for others

Fingrid has also focused on developing the European electricity market. These efforts have two types of goals. On one hand, there is a desire to ensure that the market players in Continental Europe need to play by the same rules as their competitors in Finland and in the other Nordic countries, i.e. without monopoly advantages given by their home market.

On the other hand, there is a need to fight tendencies in the EU's legislation that would impede the Nordic market mechanisms. These goals have been achieved to a great extent; in fact, the Nordic solutions have often been adopted as an example in the EU.

For Finland, a very important issue is what types of principles are applied to the outer borders of the European market area.

ETSO as a crucial developer

ETSO (European Transmission System Operators) has been a focal forum for Fingrid. ETSO has achieved an established position as one of the key parties when market development is prepared with the EU Commission and national regulators. In other words, ETSO is not just a lobbyist, but it works for concrete solutions.

ETSO's concrete achievements include the removal of cross-border tariffs in Europe and a compensation system for the costs of transit transmissions. ETSO also serves as a think-tank for new ideas and solutions, with the topics ranging from co-operation between TSOs and electricity exchanges as well as bottleneck management all the way to standards applied to data communication on the market.

The challenges of European TSO co-operation comprise the large number of parties involved, different market development stages in various countries, difficulties in the mutual co-operation between regulators, and vertical integration of power companies, which restricts the independence of many TSOs.

Heading on – albeit more slowly

The Nordic countries made good progress for several years when there were shared interests and a political will. We are still way ahead of the other parts of Europe. However, the pace has slowed down recently. The issues at hand are increasingly complicated in technical terms or economically, which also makes it more difficult to agree on them.

The Nordic electricity market was liberalised in a situation with excess supply capacity. The price of electricity decreased and was very cheap for a length of time. The price has risen clearly as a result of the excess capacity melting away and many other reasons. This has also brought to surface disappointment and criticism towards the market mechanisms.

However, the price trend depends on a number of external reasons such as rise in the price of fuels, and emissions trading. In many countries, political reasons prevent the construction of almost any type of production capacity. Investors feel that the regulatory environment is too uncertain for long-term investments. On the other hand, it is only now that we have reached a price level where investments in new capacity are viable.

One could say that the actual market mechanisms work quite well. However, there are threats to the market, such as excessive concentration of enterprises and abuse of market power.

The market can be and must be developed further, as has been stated in so many recent reports. Transparency can be enhanced, competition supervision can be intensified, and the functioning of the electricity exchange can be improved.

The TSOs have their own role in reducing transmission bottlenecks and in harmonising rules of the game. This will be in Fingrid's focus also in the future.

EIA process on the Seinäjoki – Tuovila transmission line launched

■ New 400 kilovolt line in Ostrobothnia makes preparations for a higher voltage level

Fingrid has launched the environmental impact assessment (EIA) procedure for the route of the new 400 kilovolt transmission line from the Seinäjoki substation to the Tuovila substation in Mustasaari in western Finland.

The route of the planned transmission line will be located in the areas of Seinäjoki, Ilmajoki, Ylistaro, Isokyrö, Vähäkyrö, Laihia and Mustasaari. The length of the new line is approx. 55 kilometres. It will also replace the present aged 110 kilovolt line between Seinäjoki and Tuovila.

The new 400 kilovolt transmission line also makes preparations for a shift-over from a voltage level of 220 kilovolts to 400 kilovolts in the transmission network in the coastal regions of Ostrobothnia. This will take place in stages over the next 10 to 20 years as it will become necessary to replace the present 220 kilovolt transmission network in the region due to its ageing. The new towers of the planned 400 kilovolt transmission line will also hold the 110 kilovolt transmission line between Seinäjoki and Tuovila.

The transmission line route has one main option, which is located in the place of the present Seinäjoki – Tuovila 110 kilovolt line. On the line section between Tuovila and Laihia, a 110 kilovolt line will also be constructed on the same

towers. Various technical structural alternatives will be examined in the vicinity of housing.

Information on the project is available on the Internet (in Finnish) at www.fingrid.fi (Ympäristö ja voimajohdot =>YVA-menettelyt). The pages also contain relevant maps.

Fingrid will make a further reduction in the price level of grid transmission

■ Fingrid's positive cost trend has enabled the company to transfer part of the profit to improve the company's balance sheet. During the 10-year history of Fingrid, its equity ratio has grown from 10 per cent to approximately 25 per cent.

In line with increasing equity ratio, the price level of grid transmission has had a decreasing trend. Most recently, the company reduced the transmission prices by an average of 5 per cent at the beginning of 2006.

Based on its positive economic outlook, Fingrid has decided to reduce the price level of grid transmission by another 5 per cent as of 1 January 2007.

Fingrid has reduced the transmission price by a total of over one fifth during its 10-year existence.

Revised guidelines for transmission congestion management within the EU

■ The European Commission has decided on new guidelines for the management of electricity transmission congestions and informing of the congestions. The decision came into effect 20 days after it was announced in the EU's Official Journal, i.e. on 1 December 2006. The decision constitutes legislation which binds the EU member states.

The foremost changes brought by the new regulations concern the communication of transmission congestions and transparency of information. The new rules also require that cross-border transmission capacity must be made available on market basis to electricity trade parties throughout Europe.

For several years now, the Nordic countries have been voluntary forerunners in the transparency of information supplied to the electricity market. The new regulations also brought some visible changes to the Nordic countries.

During the past summer, the definition principles of capacities and the maximum capacities during the normal grid situation in the Nordic countries were published on Nordel's and Nord Pool Spot's Internet pages. The more accurate publication of the causes and locations of transmission congestions is being prepared.

The transmission system operators (TSOs) were given an obligation to report production interruptions and disturbances in excess of 100 megawatts to the market. In the Nordic countries, this information will be supplied in cooperation with Nord Pool Spot and the Nordic TSOs.

Inspired by the new guidelines, ETSO (European Transmission System Operators) is also implementing a web-based system referred to as ETSO Vista, which will present issues such as the transmission capacities of cross-border lines as well as planned and actual transmissions. The new system was published in ETSO's seminar in Brussels in November.

The new guidelines oblige the TSOs to use the bottleneck revenues primarily for projects specified in advance to alleviate the transmission congestions. This decision is in line with the model applied by Nordel.

Hannu Haase received honorary title

Tarja Halonen, President of Finland, granted Hannu Haase, Managing Director of Rovakaira Oy, the Finnish honorary title of insinöörineuvos on 1 December 2006. Hannu Haase has been a member of Fingrid´s Advisory Committee since 2001 and served as its Chairman in 2005 - 2006.

Pirkanpylväs tower being erected in Lempäälä.

Asset management is guided by a **demanding but successful operating model**

TEXT BY Kari Kuusela
PHOTOGRAPHS BY Juhani Eskelinen, Mika Kuivalainen and Risto Ryynänen

Fingrid purchases all projects, services and materials relating to its asset management from outside expert companies. The company wishes to be a knowledgeable customer, i.e. it wants to know exactly what it orders. This is why everything essential from the specification of work to its supervision is kept in the company's hands. This is a demanding model of operation, but the good results are rewarding and encourage us to continue on the selected path.

Fingrid's asset management is founded on proficient personnel. Personnel order the work for both maintenance management and construction projects. Consulting services are not used even in conjunction with the most demanding orders.

The operating model adopted requires focus on the essential and constant development of performance. This has been the case throughout Fingrid's existence. The procurement documents are updated and modified regularly, and the processes are adjusted to the changing circumstances.

It is also important to transfer knowledge and experience from the senior specialists to new personnel. Comprehensive and versatile in-house training, master-journeyman model and suc-

cessful recruitment are the foremost means for ensuring expertise.

Modern tools have been developed and acquired to facilitate the work of specialists: database software, new data transmission methods, camera surveillance, and mobile technology. These are used for automating routine jobs and also for developing new information and methods so that the performance can be enhanced further.

Co-operation ensures improvement in supplier relationships

Constant development of suppliers and their continued expertise are vital for Fingrid's success. This is why we emphasise versatile development work. We arrange various types of training programmes, where participants from the suppliers' personnel are also invited. We also hold regular performance development and feedback sessions with the suppliers and monitor the quality of the suppliers' performance through audits.

A specific Extranet interface, FgPartners, has been developed for the communications between the supplier and customer, for the ordering of small assignments, and for reporting completed work. Through FgPartners, the suppliers can update their information directly in Fingrid's data systems. Since the same information only needs to be entered in the system once, overlapping work is avoided and the quality of information is improved. The suppliers can also use FgPartners to access information which has bearing on their work, without the need to have the information on paper.

Development efforts for occupational safety also represent co-operation between the customer and supplier at its best. This takes place through means such as joint development projects, harmonisation of safety requirements, efficient monitoring, and swift elimination of defects detected.

Fair play as the basic principle in competitive bidding

Fingrid's competitive bidding policy can be summarised in two words: fair play. All suppliers are aware of the rules of fair play and trust the rules.

Fingrid's construction projects and maintenance management services are subject to competitive bidding in accordance with Finnish competition legislation and the EU's directive on public procurement. All willing parties have been able to participate in competitive bidding.

During the procurement process, information has been delivered to all parties simultaneously, and the quotations have been opened in a separate opening event. The prices are not discussed after the quotations have been submitted, but the correct pricing needs to be done during the quotation phase. The contracts have been awarded to the quotations which are economically most advantageous as a whole. All bidders have been informed of the quotation of the winning contractor.

The market has worked well, and a sufficient number of quotations have been received for the projects so that comparisons have been possible and so as to verify the correct price level.

The assignments have gone rather evenly to different suppliers. Especially in large projects, the price level has often been lower than budgeted. However, it is also in Fingrid's interests that the suppliers conduct their business from a sound basis and take care

Fingrid's assets

- 14,000 km of transmission lines
- 105 substations
- 2,000 km of optical fibre, and
- 19 units of gas turbines (515 MW)

Equipment installation at substations requires great precision and skills.

of the continuity of business, and that they can develop and secure their own expertise in the long term.

Value and number of projects have doubled

Substation and transmission line projects are ordered as total contracts applying the turn key principle. The supplier is hence responsible for detailed engineering, materials, construction and installation work, as well as testing and commissioning. Fingrid is responsible for the specification of the project, commercial procurement documents and technical specifications. Naturally, Fingrid also manages and supervises the project.

One of the benefits of this operating model is that it allows to decide carefully and individually in each case what is needed and what is not. Unambiguous roles of the supplier and customer also ensure that either party is always responsible for each decision and action. This improves the quality of the assignments and cost control essentially as compared to a model where these roles are mixed.

The crucial thing in the execution of the projects is that the supplier and customer have seamless co-operation. This prevents mistakes and also brings out good solutions to problems surfacing during the project.

The value and number of projects have doubled since the early years of Fingrid. It is therefore necessary to develop the operating model continuously.

Presently, we are developing quality control and assessment so that in the future we can take the suppliers' past quality and well-performed assignments into account better than before when choosing suppliers for new projects.

Top results in maintenance management

High-quality maintenance management – i.e. maintenance and local switching operation – guarantees that the number of disturbances and faults remains small. Competitive bidding of maintenance management assignments ensures that the price level applied is correct.

Fingrid has always been in the top league in comparisons. The company has participated five times in the international ITOMS benchmarking in maintenance management. Every time, Fingrid has represented best practice, which means that both its quality and cost level have been among the best in the benchmarking study.

Competitive bidding in maintenance management follows the same principles as the procurement of projects. Competitive bidding is public and fair. The basic service contracts for maintenance management are drawn up for three years at a time. The suppliers are chosen on the basis of quality and price.

Competitive bidding follows Fingrid's regional sectors. This guarantees that the faults are repaired by suppliers located close to the relevant site. Special maintenance (such as that of transformers and circuit breakers) is ordered

Occupational safety is vital in transmission line work.

Crossing lines at Lapijoki.

on a nation-wide basis for 1 – 3 years at a time.

In the maintenance management policy, we have shifted from mere time-based maintenance to condition-centered and reliability-centered maintenance (RCM). Based on earlier experience, equipment history and importance of the relevant component, specialists decide on a proper maintenance programme for each item of equipment.

Modern data systems have facilitated this work greatly. The databases contain information on Fingrid's equipment and its maintenance and faults over a period of more than 15 years, which is unique for almost any transmission system operator in the world.

The documents and drawings of transmission lines and substations are saved in electronic databases so that both our own personnel and suppliers can examine them at their own office or even at the relevant site.

The locations of all substations and transmission line towers have also been saved electronically. This facilitates finding the right route for example when driving to the fault site.

Success factor: correct basic solutions

Alongside proficient personnel, correct modes of operation and reliable suppliers, Fingrid's primary success factors have comprised correct basic solutions and policy decisions made in Finland decades ago. These concern both the structure of the grid and the outlining, implementation and maintenance of the various parts of the grid. Naturally, these have been developed constantly.

ITOMS 2005 participants

North America

AEP	*American Electric Power*
BCT	*British Columbia Transmission Company*
ITC	*International Transmission Company*
PGE	*Pacific Gas & Electric*
TVA	*Tennessee Valley Authority*

Europe

ELI	*Elia*
EON	*E.On-Netz*
ESB	*ESB National Grid*
FGC	*Federal Grid Company*
FIN	*Fingrid Oyj*
LAN	*Landsvirkjun*
NG	*National Grid*
REE	*Red Electrica de España*
REN	*Rede Eléctrica Nacional, S.A.*
STA	*Statnett*
TEN	*Tennet*

Australia/New Zealand

PLQ	*Powerlink Queensland*
PNT	*SPI Powernet*
TND	*Transend*
TGD	*TransGrid*
TRP	*Transpower New Zealand*
ECT	*Electranet*

Others

TNB	*Tenaga Nasional Berhad*
TCO	*TRANSCO*
ESK	*ESKOM*

ITOMS = International Transmission Operations & Maintenance Study

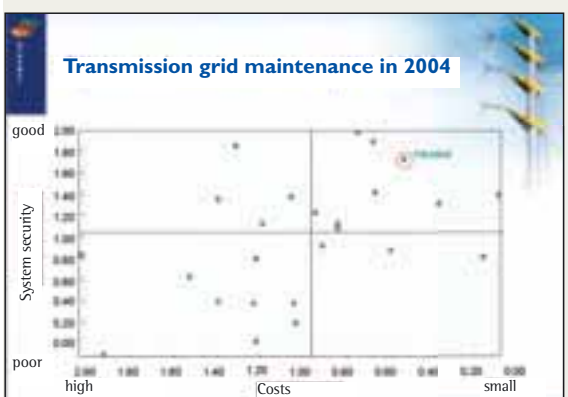

Includes: Substation maintenance Transmission line maintenance

In the international maintenance benchmarking for the transmission grid, based on results from 2004, Fingrid was again in the top league.

The condition of transformers is monitored by means of camera surveillance via the Internet.

The commissioning of the third 400 kilovolt transmission connection between Finland and Russia was celebrated in a working meeting at the Vyborg converter station in February 2003. The representatives of the Russian and Finnish parties are shown here in front of the converter station.

ELECTRICITY **FROM RUSSIA**

Electricity imports from Russia to Finland draw on traditions of more than four decades. Fingrid wishes to have genuine co-operation, which benefits all parties, with Finland's eastern neighbour. It is important to use jointly accepted principles for assessing the future and its needs.

TEXT BY Matti Tähtinen PHOTOGRAPHS BY Eija Eskelinen, Juhani Eskelinen, Leni Lustre-Pere and SXC

Commercial imports of electricity from Russia to Imatra in Finland were launched by Enso-Gutzeit Oy in co-operation with Masinoexport and Imatran Voima Oy in the early 1960s. The imports took place from the Russian power system using a separate 110 kilovolt connection, which was fed from the Svetogorsk and Lesogorsk hydropower plants. A corresponding solution was used a few years later when electricity imports started to the municipality of Inari in Lapland from Kaitakoski in Russia.

In a couple of decades, the total import volume grew to 100 megawatts. Imports took a steep upward turn in the 1980s when imports of electricity from Vyborg were started through new 400 kilovolt connections to the Yllikkälä substation, which was specifically built for imports in the Finnish grid. The initial power was 300 megawatts, but by the mid-1980s the capacity was raised to a maximum of 900 megawatts after the expansions of the Vyborg DC substation were completed.

Imatran Voima was in charge of electricity imports on the basis of commercial policy contracts between the Soviet Union and Finland. The imports were supplemented by a procurement contract of 100 megawatts signed by Teollisuuden Voimansiirto Oy at the beginning of the 1990s. The company also launched the implementation of a 400 kilovolt cross-border connection of its own. However, this project was interrupted by the dissolution of the Soviet Union.

Transmission capacity for all parties

After the long-term electricity import contracts on the 400 kilovolt connec-

Partial view of the control panel at the Vyborg substation.

tions from Russia expired, the vacant capacity could be made available to all parties as of the beginning of 2001.

Fingrid started the present-type transmission service at a power of 900 megawatts. The capacity was later upgraded by 400 megawatts once the third cross-border line project, which had been interrupted earlier and later on acquired by Fingrid, was completed in early 2003. The third cross-border connection was used for connecting the modern 450 megawatt combined cycle gas power plant in northwestern St Petersburg directly to the Finnish power system.

In Finland, this addition in import capacity required not only a new cross-border line but also the construction of the Kymi 400 kilovolt substation and from there a transmission line of 100 kilometres to Länsisalmi in the Helsinki region. The system security of these connections has since been improved mainly by Russians, who have carried out extensive renovation projects at the Vyborg DC substation and especially on existing cross-border lines.

The cross-border transmission service offered by Fingrid has been used by a very international clientele over the past six years. More than 10 actors have imported almost 60 terawatt hours of electricity to the Nordic market during that period. Moreover, some 20 other Finnish and foreign players have been interested in capacity reservations.

Close co-operation with various parties

Transmission of electricity from Russia has required from Fingrid long-term and close co-operation not only with its customers but also especially with OAO "RAO UES of Russia", which was responsible for the Russian grid and foreign connections. Later on, the number of responsible counter parties has increased as the electricity market reform in Russia has progressed.

At present, Fingrid's partner in long-term planning and contracts in Russia is JSC "FGC UES", which is responsible for the main transmission grid and cross-border connections, as well as its regional companies and offices in St Petersburg and Vyborg. The technical operation of the entity composed of the three 400 kilovolt transmission lines and related commercial issues require daily contacts with "SO-CDU for UES", JSC which is responsible for the operation of the Russian power system, and also with JSC "INTER RAO UES" which is the seller of electricity.

Goal: increased flexibility

Administratively, the co-operation between the grid companies in Finland and Russia is co-ordinated by a system committee, which assembles at least twice a year and more often if necessary. Three permanent work groups with specific programmes work under the committee, focusing on the preparation and follow-up of contracts, planning of grid operation, and technical co-operation. In many cases, preparatory work has been expanded to ad hoc work groups or projects and to an annual customer meeting.

The results and goals of co-operation are discussed in regular negotiations between executive management. Presently, we are renewing the system contract governing the technical and commercial execution of the transmission service. The goal is to increase the flexibility of capacity use and operation of connections and to make better preparations for extraordinary situations.

Future plans based on facts

There has been increasing interest in constructing new cross-border connections and in new imports, especially within companies other than the traditional players. Technical analyses have been drawn up concerning cross-border lines which would start from either the Kola Peninsula or Viena Karelia. However, most publicity has been attracted by the sea cable project from Sosnovyi Bor to Finland.

However, the increasing power balance deficit in the St Petersburg region needs to be taken into account when assessing the availability of even the present level of imports. Additional imports would raise the risk of import restrictions even further and would also entail major drawbacks for the system security of the Finnish power system and for the functioning of the Nordic market.

It has been estimated that the immediate need for capital investments in the Russian power system would be tens of billions of euros. This is a huge challenge not only to the Russians themselves but also to foreign investors.

It is necessary to make the co-operation between the Russian and Finnish energy players and parties influencing it even closer than before. It must be possible to assess the future and the coming needs on both sides of the border using mutually accepted principles. For several years now, Fingrid has focused and will continue to focus on genuine co-operation with its Russian counter organisations, with this co-operation benefiting all parties.

FROM PROTECTED AREAS TO STAKEHOLDER FORUMS

Fingrid's many dimensions of environmental responsibility

Environmental considerations are an important part of Fingrid's corporate image. The implementation of new transmission line projects depends crucially on attending to environmental responsibility as well as possible.

TEXT BY Sami Kuitunen and PHOTOGRAPHS BY Juhani Eskelinen, Sami Kuitunen and SXC

Fingrid's most recent landscape tower is being completed in Eurajoki. Also shown in the photograph is Jorma Valkama, the architect who designed the tower.

Environmental matters are part of everyday life for both Fingrid and its partners. One practical example of the management of environmental matters are the environmental reviews of maintenance. Such reviews have been conducted at some 70 substations of Fingrid having influence on the environment. An important point in environmental responsibility is that when the transmission lines are being maintained and developed, we are working every day on land owned by someone else.

Landscape towers as a figurehead

Transmission line towers gained a whole new scenic dimension as a result of design by Professor Antti Nurmesniemi in the mid-1990s. Still, these towers have the same role in the transmission system as all other towers. The landscape towers, which have also won design awards, still prompt people from all parts of the world to contact Fingrid and commend their appearance.

The landscape towers represent industrial design which intends to make the transmission line adapt better to its surroundings.

The decision on landscape tower projects is made individually in each case. By the end of 2006, Fingrid has constructed landscape towers in more than 10 locations, most recently in Eurajoki and Lempäälä. The implementation of these towers follows technically and economically accepted solutions.

The long-term design project has yielded a significant number of implemented tower models, which could be referred to as Fingrid's landscape tower family.

Transmission grid – part of land use planning

Fingrid carries responsibility for the functioning of the transmission grid and for grid development. One essential component of this responsibility is the planning of new necessary transmission connections and execution of the projects.

Over the years, plans for transmission line projects have resulted in the launching of more than 20 environmental impact assessments by Fingrid. The contents of the procedures have become clearer during the course of these processes. There still seem to be challenges left in line with EU-driven environmental legislation and active development of various types of recommendations.

Over the years, Fingrid has focused especially on preliminary investigations of transmission line projects so that we could compare the available options even more thoroughly.

One turning point was the overall reform of the Finnish Building Act and the resulting Land Use and Building Act. In the Land Use and Building Act, the

supraregional significance of electricity transmission lines was recorded as part of national land use objectives. The practical impacts of this solution can be seen in Fingrid's daily interaction with 20 regional councils.

Utilisation and biodiversity

Throughout times, transmission lines have involved a challenge to find sensible uses for the transmission line areas. A decade ago, Fingrid arranged a campaign for finding versatile uses for these areas, with the campaign producing dozens of ideas. These included growing of herbs, ornamental plants and other useful plants, grazing, and physical exercise options.

Various environmental projects carried out by Fingrid together with experts have shown that transmission line areas have a great significance for the occurrence of plant and butterfly species favouring meadows. Research has augmented our basic knowledge of such species and of the environmental factors influencing them. Biodiversity and finding the positive impacts of transmission line areas have become – alongside technical issues – one of the most important areas of research and development within Fingrid.

Fingrid has sponsored biodiversity research in many ways. The company has been involved in studying issues such as birds nesting in transmission line areas, nesting of kestrels in bird houses installed on transmission line towers, grazing of elks in transmission line areas, the significance of the structure of scenery for the moving of butterflies, invertebrate occurring in transmission line areas, and wolf spiders inhabiting bogs located in these areas.

It is justified to ascertain these highly varied issues, because Fingrid's transmission lines traverse almost 80 protected areas. In addition to the above animal species, we have become familiar with Russian flying squirrels and most recently with swamp frogs.

A clearing and management guidebook has been prepared for the maintenance of transmission line areas, and we have studied the mechanical clearing of transmission line areas, biological prevention of coppice growth, and the decay impacts of helicopter sawing.

Improvements through feedback

In order to improve our performance, we have always studied the opinions of landowners concerning the procedures applied to our construction projects. Such inquiries have been conducted in

conjunction with all major transmission line projects.

The suggestions given by the respondents have highlighted the need for more information, and the fear of the potential health hazards of transmission lines has also surfaced repeatedly. On the other hand, those landowners and residents who have expressed their opinion on a project feel later on that our line project has caused less impacts, than those who did not express an opinion.

It is also often that Fingrid's representative has to balance between the contradictory views of authorities and landowners when dealing with issues influencing the route of a line. Fingrid has always attempted to secure the participation opportunities of citizens in the various phases of a construction project, and we have drawn up various checklists to support the execution of projects.

On seven occasions, Fingrid has participated in the annual Farmari agricultural exhibition in Finland. Initially, our main duty at the exhibition was to make people familiar with the name Fingrid. Later, the exhibition has been important to us because it provides an opportunity to meet landowners face to face and to conduct discussions on issues such as multipurpose uses of transmission line areas, and construction projects.

The feedback we receive during the line construction projects is so valuable to us that we intend to continue gathering it. The implementation of the projects as well as research and development work carried out have been backed by active and open stakeholder interaction. Our partners have comprised research communities, consultants, ministries and their various administrative branches, other authorities, and lobbyists – not to forget direct feedback from landowners. The stakeholder forums launched this year contribute to the promotion of these issues.

Ari Marttinen, Operating Engineer, at work at Fingrid's Power System Control Centre in Helsinki.

Grid operator promotes and produces **HEAVY-DUTY TRANSMISSION EXPERTISE**

Fingrid possesses extensive knowledge and expertise basis in Finland. The company intends to pursue that trend. Maintaining and developing the expertise of personnel is hence a focal area for Fingrid.

In its R&D which generates new expertise and expedites further developments, Fingrid has focused above all on ensuring the power system security.

TEXT BY Jussi Jyrinsalo PHOTOGRAPHS BY Juhani Eskelinen

Upon the launching of Fingrid, it was transferred experienced and proficient personnel. However, constant development of the company's duties and procedures has meant that learning new things has become a constant state of affairs even for the "old hands".

Final theses as the main means for induction

Very little know-how required by transmission system operation is created in Finland outside our own company, and new personnel have usually learned their specific duties after they have been hired by Fingrid.

In many cases, new persons have learned about power transmission grids through final theses required by their studies. During Fingrid's ten-year history, we have commissioned or funded some 80 final theses or supplementary training degrees. About 30 of these have been Master's theses in power engineering.

The theses have been supervised by more experienced specialists, and occasionally the theses have concerned completely new areas so that the supervisor has also had to learn new during the work. Such cases have often also used a more comprehensive control group so that the information created would be diffused better within Fingrid.

Four levels in specialist career

In addition to the conventional managerial career, Fingrid applies a career path for specialists. Advancement on the managerial career is usually based on job rotation, comprehensive outlook and administrative experience, while the specialist career is based on constant and deepening development in an area of expertise which has bearing on the company, with no administrative responsibility.

The specialist career includes four levels, and a specialist's independent expertise advances in line with these, but at the same time the responsibility for sharing

the information and for the independent development of the relevant area increases also. About 90 persons have advanced on the specialist career during Fingrid's history, and some of them have also supplemented their vocational qualification during the process. In addition, more than 100 persons have participated in internal job rotation.

In-house and joint training

Much of the technical training arranged by Fingrid for its personnel has been provided through the company's own resources, because there is very little in-depth training on grid technology outside the company. These efforts have resulted for example in a basic training package (book and lecture material) for the transmission grid and several special courses.

So as to ensure that students of power engineering receive high-quality education in electricity transmission technology, Fingrid has donated a five-year professorship in power transmission systems to the Helsinki University of Technology as of the beginning of 2006. The person elected for the position has gone through Fingrid's specialist career and drawn up her doctoral thesis in transmission technology, which contributes to the teaching and research being focused on areas which are important for Fingrid.

The goal is to create a centre of expertise of a few persons around the professorship so that the continuity of development projects in transmission technology could be ensured and also so that experts with profound knowledge of transmission technology could be recruited by Fingrid.

The power system simulator is used for exercising normal grid operation and disturbance situations in the grid. Almost the entire power system in Finland has been modelled in the simulator.

R&D ensures the development of vital areas of expertise

Research and development is one way of creating new expertise and ensuring continuous developments in strategically important areas. It has been characteristic of Fingrid's mode of operation that it does not have a separate organisation responsible for R&D projects, but instead, the development projects are a natural part of each organisational unit and work of each specialist.

Especial attention has been paid to maintaining and promoting the system security of the grid by developing the engineering tools, network solutions, and grid operation and maintenance.

As a result of the development projects, for example the fault tolerance and loadability of the grid have been improved so that it has been possible to double the overall transmission capacity on the border between Finland and Sweden. This has been accomplished through means such as series compensation of the grid and modifications in the control circuits of major power plants. The latter were based on close co-operation with research institutions and Fingrid's customers. This is a good example of how optimum results also call for close co-operation with our stakeholders in development projects.

Interaction in development work

The focal areas in Fingrid's R&D include analysis and control methods for managing operational security and power transfers, technical solutions and maintenance management which enhance system security, and adapting the power transmission system to its environment.

In the coming years, we will concentrate on issues such as real-time management of the status of the Nordic power system, utilisation of condition monitoring information on equipment, and studying the environmental impacts of transmission lines.

So as to make sure that R&D will correspond to the future needs, we will aim at active interaction with our stakeholders. We cannot necessarily identify all the changes affecting us on our own, but we need more eyes, ears and brains to support our development work. To facilitate this, we have established a technology forum and a forum focusing on transmission lines and biodiversity so that we can bring new parties to the creation of ideas.

We cannot manage on our own in R&D, but we welcome all development ideas and co-operation opportunities offered to us.

Unused power plants in short starting readiness as of the beginning of January

By virtue of a new act which came into effect on 15 December 2006, Finnish condensing power plants which have been at standstill are harnessed to secure electricity supply during the peak load period as of the beginning of 2007. The act is based on a model drawn up by Fingrid. In line with the act, Fingrid will have much more latitude in maintaining a power balance between electricity production and consumption, which has been entrusted to Fingrid.

TEXT BY Eero Kokkonen and PHOTOGRAPHS BY Hannu Vallas and SXC

Last January, the weather in Finland was very cold for about a week, also bringing electricity consumption to record figures. The all time high consumption peak in Finland, approx. 14,800 megawatts, was reached on Friday 20 January 2006.

All power plants which could be started at a short notice were running, and electricity was imported from Russia and Sweden. Hydropower production had to be restricted because of ice problems in rivers, and some of the condensing power plants were closed for a long period of time because their opportunities to contribute to market-based electricity production have become essentially poorer as a result of increased price of fuels and launching of emissions trading.

The peak load situation was managed without consumption restrictions, although Finnish electricity supply had to resort to considerably high imports of electricity. Some 20 per cent of the electricity consumed during that period was imported from the neighbouring countries even though electricity deliveries from Russia were subject to long-term restrictions attributable to the seller.

Continued increase in electricity consumption

Electricity consumption in Finland has grown at a rate of approx. 2 per cent per year in recent years with the exception of 2005, when the stoppage in the pulp and paper industry reduced consumption significantly.

It has been estimated that the growth in consumption will continue at the

same level for some time to come. This also means that the annual peak load will grow, although low temperatures and the length of the cold period have some significance.

Nordel's power situation forecast for next winter suggests that the peak load in Finland will grow by some 200 megawatts from the figures reached last winter, i.e. to 15,000 megawatts.

Considerable capacity reductions are a threat to the market

Finland has an estimated 500 – 800 megawatts of separate condensing power units which have been used very little in recent years or which have been in complete standstill. This has been due to the more expensive prices of fuels, impacts of emissions trading, and the Nordic electricity market situation.

The price of heavy fuel oil in electricity production has more than tripled from the level of the mid-1990s, and the prices of CO_2 emission trading, which commenced in 2005, have ranged from 5 to 30 euros per tonne on the market, This year, Nord Pool's weekly spot price of electricity has varied from 34 to 76 euros per megawatt hour, while the highest production costs of oil condensing power have been almost 130 euros per megawatt hour.

This is why the owners of some power plants have not received any proceeds from the market for covering the continuous maintenance costs of the plants. Some of the owners have tried to reduce their costs by removing such power plants from readiness for use to long-term storage and given a notification of the removal of the plant from market use.

The owners of certain power plants have stated that financial reasons force them to remove their plants from use permanently. If this actually happens, the available production capacity during peak load situations in the coming winters will decrease considerably.

Higher dependence on imports

Fingrid has analysed the power situation on the basis of the estimated peak load and available production capacity in Finland, extending to the winter of 2009/2010. The analyses took into account the known construction projects for new production capacity and the imports of electricity from Estonia. The impacts of a fault at a large production unit and the effects of import restrictions of electricity were also examined.

The analyses showed that retaining the existing production capacity in readiness for use is extremely important, because energy supply in the coming years will depend crucially on imports of electricity.

In accordance with system responsibility imposed on the Finnish transmission system operator, Fingrid has an obligation to maintain a balance between electricity consumption and production during each hour. Insufficient electricity production and potential import restrictions will ultimately have to be managed by Fingrid during each hour. In the absence of resources, it may happen that the only option to maintain a power balance is to disconnect consumption for specific periods.

System security as the goal

About a year ago, Fingrid started to examine a potential model which could ensure that condensing power capacity, which is under a threat of being closed down, could be retained in short-term readiness for use especially during the peak load period in the winter. It soon became apparent that the introduction of the new arrangement is not possible without separate temporary legislation.

The basic idea in the arrangement is that Fingrid pays compensation to the owners of certain condensing power units when the owners maintain a 12-hour readiness for use in the winter period and a readiness for use of approx. 1 month at other times.

Only such capacity which fulfils the relevant conditions and which has been in minor use is eligible for the arrangement. Fingrid acquires the capacity by inquiring from the owners of power plants which fulfil the conditions a bid price at which the owners are willing to participate in the arrangement.

Based on accepted bids, usage contracts between Fingrid and the producers will be signed for the period of 1 January 2007 to 31 December 2008. The contracts will specify issues such as maintaining of readiness for use and the producer's rights and obligations concerning the operation of the power plant and handling of electricity produced. If no inter-Nordic or other corresponding arrangement is created during the contract period, the same model will continue, if needed, until the expiry of the act using specified contracts.

In accordance with the model, Fingrid does not participate directly in electricity trade, but a producer is obliged to

give electricity sales bids to the market in accordance with a bidding structure agreed with Fingrid. The producer prices the sales bids, considering the requirements laid down in the act.

The goal is to submit the sales bids so that the disturbance caused to the market is as small as possible. An implemented sales bid is an indication of market need for peak load electricity and at the same time a clear starting signal for the power plant in question. The producer is obliged to draw up a separate balance settlement concerning electricity production and related sales, and the settlement shall be reported to Fingrid.

If the electricity sales bids are not realised but Fingrid sees, on the basis of consumption and production forecasts prepared by it, that some peak load power covered by the arrangement is needed for the needs of the power system, Fingrid requests the starting of the necessary power plant units. The stopping of a power plant is always agreed between Fingrid and the producer.

It was initially planned that the system would be financed by allocating the costs through separate fees to the balance providers and non-Nordic imports in equal proportions. During the preparation of the act, however, it turned out that this is not possible, which is why the law proposal presented that half of the costs would be allocated to the fees concerning transmissions in Finland and the other half to transmission fees on imports from Russia and Estonia.

The report drawn up by Fingrid was subjected to a work group of the Finnish Ministry of Trade and Industry, and the Ministry sent it to circulation for comments together with preliminary legislative amendments last summer. The basic structures of the model have been discussed in Fingrid's Advisory Committee, Power System Committee and balance seminar. The model has also been discussed in several organisational meetings within the business.

Fingrid's model as the basis of the act

After the peak load situation last winter, the Ministry of Trade and Industry arranged two discussion events among the electricity business. The goal was to find means for securing the readiness for use of electricity production capacity in peak load situations.

The events did not come up with an actual solution, but the necessity of creating quickly a temporary model was stated jointly. In the latter event, it was agreed that a shared work group be established between the Ministry, the Energy Market Authority, and Fingrid. The group's objective was to create a temporary model and draw up the necessary law proposal so that once passed, the act will secure the readiness for use of the relevant capacity as of 1 January 2007.

The Ministry of Trade and Industry completed the law proposal by mid-October, and the act became effective after the due process on 15 December 2006. The act will be valid until the end of February 2011.

The act deals with the regulations relating to the model on a rather general level, and the procedures presented by Fingrid in its report have constituted the basis of the act.

The general justifications of the act estimate that the costs of maintaining the readiness for use would be divided so that approx. 50 per cent will be allocated to the Finnish parties and some 50 per cent to parties importing electricity from Russia and Estonia. The fees will be levied as part of the transmission fees.

The act gives the Energy Market Authority main responsibility for supervising the implementation of the arrangement. The Energy Market Authority accepts the rules appended to the usage contracts to be signed between Fingrid and the producers, and these rules must be made public.

Model to be adopted

Fingrid has received replies to its inquiries concerning the power plant capacity. The replies suggest that the total capacity would be 600 megawatts. The total costs of the arrangement will be about 10 million euros per year.

When this article is being written, the preparations for the relevant agreements to be signed with the producers and for the related practical measures have progressed so far that only the signatures are missing.

The Energy Market Authority confirmed the rules for the arrangement included in the agreement on 20 December 2006. The rules are public and available on Fingrid´s Internet pages.

The procedures in accordance with the arrangement and the 12-hour starting readiness of the power plant units will commence on 1 January 2007.

Grid ABC

This article series deals with the main operating principles, equipment units and components in the main grid. The earlier articles have dealt with substation equipment, power and instrument transformers, switching devices, operation control system, and relay protection.

TEXT BY Harri Nurminen
PHOTOGRAPHS BY Harri Nurminen and Juhani Eskelinen

DIRECT CURRENT ELECTRICITY TRANSMISSION

In the early days of electrification, during the second half of the 19th century, the choice between alternating current (AC) and direct current (DC) initially favoured the latter. The first concise electricity transmission systems used direct current and delivered electricity mainly for the needs of lighting.

The development of the AC induction motor led to the creation of a competing system, and around the 1890s, AC systems replaced direct current in electricity distribution. As early as then, the competitive edges of alternating current included the boosting of voltage used on the transmission lines by means of transformer. This enabled increasingly economical and loss-free electricity transmission over long distances.

Presently, most of electricity is transmitted using alternating current, both in the Nordic Nordel grid and globally. Still, ever since developments in power converters were achieved in the 1950s, DC links have also been constructed. Direct current is in fact a better option than alternating current in certain special cases; sometimes even the only option.

The first rectifiers/inverters were implemented using mercury-arc valve devices, and from the 1970s onwards by means of thyristor valves (such as on the Fenno-Skan link). Presently, the options include power transistors used earlier in frequency converters (e.g. EstLink).

A high voltage direct current (HVDC) connection has for example the below advantages (+) and drawbacks (-) over an AC connection of the same capacity:

+ The transmitted power of the connection can be controlled freely and it is independent of AC networks at the ends of the connection or parallel to it.

+ Power control is very quick, and available transmission capacity can be used as power reserve or for the power control of parallel AC connections.

+ The system connects AC networks asynchronously, i.e. the networks can have different frequency or at least different kinds of frequency control principles (for example the Vyborg DC connection between the Nordel grid and the Russian UPS system).

+ The overhead line has a simpler line structure and a narrower right-of-way.

+ No stability problems; long connections can also always be loaded up to the thermal limit.

+ The power factor of a DC line/cable is always 1; no need for the compensation of reactive power.

- The power converter stations are expensive and complicated (= additional costs).

- The power converters consume much reactive power which usually needs to be produced at the power converter station.

- The power converters produce harmonics, the spreading of which must be prevented by means of filters installed at the power converter station.

Thyristor building of the Rauma DC substation. Shown in the photograph are Fingrid's Line Route Specialist Hannu Ylönen (on the left) and Protection Supervisor Pekka Lepistö.

The reasons for choosing direct current can be economic or technical. Below are the three most common application areas:

1 On sufficiently long overhead lines, the additional costs caused by power converter stations are compensated by a less expensive line structure. Such connections up to several thousands of kilometres in length have been built for example in North America, India and China when utilising electricity production capacity (usually hydropower) located far from the consumption areas.

2 In cable connections built across a waterway, the maximum available distance for alternating current is about 50 - 100 kilometres depending on the voltage. Over longer distances, the capacity is lost in the transmission of reactive power created by the high capacitance of the cable. Long and high-capacity sea cable links can only be carried out in direct current (such as Fenno-Skan).

3 Due to technical and also historical reasons, power systems in different parts of the world are not synchronised with each other and may also have different frequencies. In Europe, for example the Nordic Nordel, UCPTE in Western Europe and UPS in Russia are all 50 Hz systems but asynchronous with each other. A frequency of 60 Hz is in use in North America, but there are several systems which are asynchronous with each other. The main islands in Japan even use different frequencies. Such systems can be connected by means of a back-to-back DC connection, where the rectifiers and inverters are located "back to back" at the same substation. Of course, there can be a cable or even a line between the systems, like between the 50 Hz and 60 Hz systems in Japan.

The basic component in a conventional power converter station provided with thyristors is a 6-pulse bridge (Figure 1), where each of the six branches is referred to as valve. In simultaneous operation are always those two valves which switch the alternating voltages (UR, US, UT) with the highest absolute values to direct voltage (UD), which is hence composed of the fluctuation waveform of the 3-phase alternating voltage.

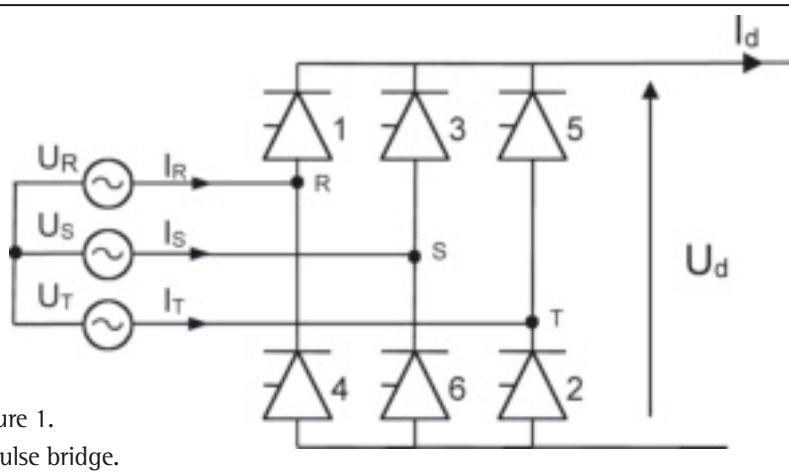

Figure 1.
6-pulse bridge.

The diode bridge, which is familiar for example from the alternator of a car, is in a way multiplied to have three phases. Moreover, the ignition of the thyristors can be delayed by the desired current delay angle unlike with diodes, which always "pass" a positive voltage. The main principle is to use the current delay angle to control the magnitude of the direct voltage at each end of the connection so that the HVDC connection starts to follow the basic equation of electrical engineering, P = U x I, in accordance with Figure 2. The power converters serve as current sources (the direction of current is always the same), and the power direction is reversed by changing the polarity of voltage. And so you're ready to transmit electricity...

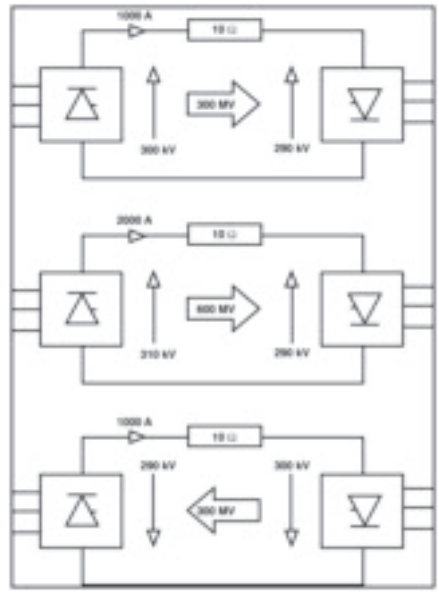

Figure 2. Determination of capacity of DC connection.

In practice, both the power converter itself and its control algorithms are much more complex. The purpose of a HVDC link is to transmit large power volumes in a trouble-free manner be-

Aerial photograph of the Rauma substation.

tween the terminal substations. Power control must be very precise and quick and also adapt to possible changes and disturbances in the AC network. Alongside the actual high-voltage components, the control systems at each power converter station have a crucial role. These "system brains" have constant data communications with each other, and they are fully doubled in order to guarantee system security.

The main components of a HVDC substation are shown in Figure 3 and partly also in the aerial photograph of the Rauma substation, which is a conventional HVDC station equipped with thyristors.

The 12-pulse thyristor bridge in the valve building is composed of two 6-pulse bridges connected in series. The 30 degree angular phase difference (accomplished by means of a star-delta switch) between the bridges gives a more even voltage fluctuation waveform, which reduces considerably the need to filter the harmonics. The 12 valves are typically grouped into three towers of four valves each, hanging from the ceiling of the valve building.

The HVDC transformers feed the three-phase alternating voltage separately to each 6-pulse bridge. In Rauma, there are three single-phase three-winding transformers, each of which feeds a 6-pulse bridge connected both to a star and to a delta. The on-load tap-changers of the transformers assist the control of direct voltage, which is primarily carried out by means of the current delay angles of the power converter.

The AC filters restrict the access of harmonics created by the power converter to the AC network and also produce reactive power for the needs of the power converter. The reactive power compensation capacity needed is about half of the active power transmitted. The Rauma substation has three 80 Mvar units, two of which also serve as AC filters and the third is a compensation capacitor without filtering.

A DC filter is needed if the DC connection leaving the substation is an overhead line, as in the case of Rauma (the first 33 kilometres to the Rihtniemi cable terminal). This prevents the induction of disturbances to surrounding audio-frequency communications networks (such as telephone networks).

Smoothing reactors smooth the direct current by restricting the rates of change of current. Their dimensioning has an impact on a number of factors in view of the operation of the power converter, such as filtering, fault currents, and uniformity of current at small powers.

The DC field connects the valve building to the DC line or cable leaving the

substation. In addition to the necessary switching devices and measuring instruments for direct current and direct voltage, the field houses the necessary smoothing reactors and DC filters.

An electrode is needed as the path of the return current on monopolar HVDC links such as Fenno-Skan (there is only one cable between the substations).

The figure does not include the valve cooling system, which is crucial in terms of the operation of the power converter. The cooling system leads the heat created in the thyristor valves outdoors by means of water circulating in the cooling circuit and condensers situated outdoors.

The HVDC links based on state-of-the-art power transistors represent a whole new level of technology as compared to thyristors in terms of both basic structure and control algorithms. On the other hand, to those knowledgeable in electric motor drives, power transistors are very familiar. Like frequency converters, the power converter serves as a voltage source, and direct current can be controlled freely (and also reversed). The control properties of power transistors are excellent, but on the other hand their losses are many times higher than in thyristor technology, at least presently.

The HVDC projects carried out and planned in the world in recent years are mostly ordinary HVDC links. The market share of power transistors is also limited by their maximum voltage and current ratings, which are considerably poorer than with thyristors. At present, a transmission capacity of approx. 400 MW at a voltage of +/- 150 kV can be achieved with power transistors, while thyristor technology gives 3,000 MW at a voltage of +/- 500 kV (e.g. the Three Gorges – Shanghai HVDC overhead line under construction in China).

However, the situation may change as a result of developments with components. The next target level for power transistors is 1,000 MW, which also means doubling the maximum voltage. On the other hand, ordinary HVDC links of +/- 800 kV are being planned in the Far East, achieving transmission capacities in excess of 6,000 MW.

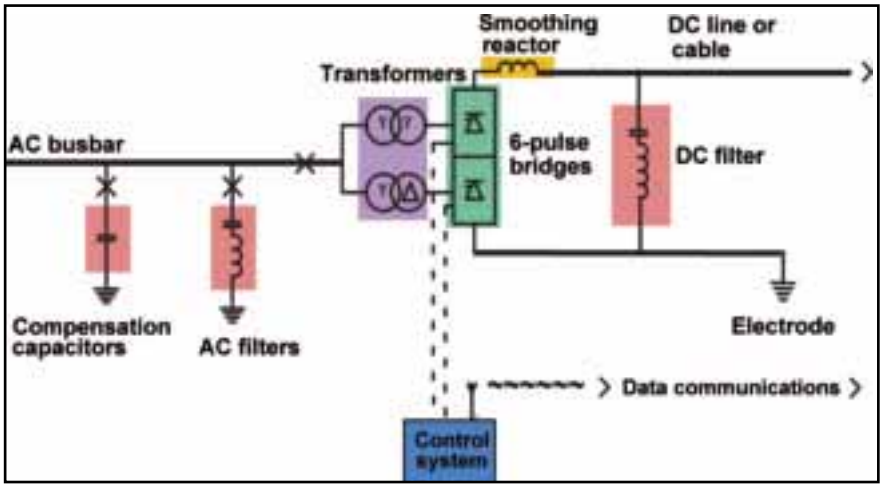

Figure 3. Main components of a power converter station.

Estlink cable in operation

■ The power and its direction in the cable can be viewed on Fingrid's Internet pages.

The Estlink cable connection between Finland and Estonia was inaugurated on 4 December. The power and its direction in the cable can be viewed on Fingrid's Internet pages on the "State of power system" display which is updated every three minutes (www.fingrid.fi).

The cable connects for the first time the Baltic countries to the Nordic electricity market. The length of the cable is 105 kilometres, of which 75 kilometres are sea cable. The transmission capacity of the cable is 350 megawatts.

The cable is initially used by the electricity companies which own it. However, by 2013 the ownership will be transferred to the transmission system operators in the Baltic countries and Finland.

Electricity production capacity in the Baltic countries presently exceeds their own need, which is why electricity will be transmitted from south to north at least to begin with.

In conjunction with the topping-out party, the guests had an opportunity to visit the power plant site under the guidance of Project Director Martti Merviö (in the bottom photograph).

Olkiluoto gas turbine power plant to rooftop height

■ The topping-out party at the Olkiluoto gas turbine power plant was held on 12 October. This plant project is shared by Fingrid and Teollisuuden Voima Oy (TVO), with Fingrid constructing the plant to its ownership and TVO participating in the capital investment costs at a share of 50 per cent. The location of the plant was decided by TVO's local need for reserve power and the company's opportunities to offer operation and maintenance services to Fingrid.

The Olkiluoto gas turbine plant to be completed in June 2007 will satisfy Fingrid's and TVO's needs for additional reserve power capacity in the near future. The plant will reinforce Fingrid's reserve power capacity required in the management of disturbances in the power system, and secure auxiliary power supply to TVO's power plants in the event of disturbances in external supply from the transmission grid. The joint project was possible because the two parties do not have simultaneons needs for reserve power.

The total capital expenditure amounts to approx. 50 million euros, of which the main machinery accounts for approx. 30 million euros. The project involves almost 30 other contracts and deliveries, with the main contract for the construction work being the largest. Fingrid is responsible for the building project as a whole while TVO is responsible for the supervision of construction work.

The main contractor in the construction work is Rakennus Vuorenpää Oy, which is responsible for the building of the concrete-frame buildings and other concrete structures. The steel frame for the turbine building as well as its walls and roof are delivered by Normek Oy. Other contractors involved in this stage of the project are Rauman Kaivin Oy, Rauman Sähköpalvelu Oy, Vesi-Vasa Oy, YIT Kiinteistötekniikka Oy and Nakkilan Konepaja Oy.

The main designer of the plant is ÅF Enprima Oy, architectural design has been carried out by Pori Arker Oy, construction planning by Insinööritoimisto WSP SuunnitteluKortes Oy, and ventilation engineering by Satakunnan Insinöörikeskus Oy.

The power plant buildings will be ready in February 2007. Indoor equipment installations have already commenced at the site. The installation of the two gas turbine sets delivered by the German company MAN TURBO AG commenced in November. Each set has a power of 50 megawatts.

L.L.-P.

Work of line supervisor

The Finnish main grid, part of our national assets, needs to be cherished and maintained. Fingrid's Line Supervisors know the location of just about every tower in their area. They are to make sure that the transmission lines remain in good condition and that electricity can travel without disturbance. Line Supervisor **Ossi Muuronen** is one of the persons who oversees the Finnish grid. Ossi moves in the natural environment with his senses alert.

TEXT AND PHOTOGRAPHS BY Reija Kuronen and FutureImageBank

What are the thoughts of Ossi, to whom the great outdoors are part and parcel of both work and hobbies? How does he go about his work and what does he think about it? Is there time to watch wildlife while moving in the forest? I decided to find about these things and joined Ossi for a day.

The professional eye only pays attention to the condition of the transmission line. Are there signs of damage in the towers, lines and foundations? Is clearing of vegetation needed and are the insulators in place? Being interested in wildlife, Ossi says that he also keeps an eye on the signs of life in the forest.

Nature enthusiast and hiker

Characteristic of autumn, the dawn is grey outside Fingrid's Hämeenlinna office. The clouds are hanging low and it looks very much like rain. We start the drive towards the first target of today, the Tikinmaa substation.

It's a long day ahead. Ossi has taken along his notes which show the work sites systematically. The work list contains sites in the same area so that the time spent driving would be as short as possible. Today, the work area is in the Tampere region. The car takes us close by, but the rest of the way has to be done on foot.

On the way to the substation, we talk about Ossi's background. He is a Master of Science in Agriculture and Forestry and a passionate nature lover and woodsman. The natural environment is closely associated with both his work and leisure time. Did he find his vocation or was it the other way around?

Forest expert brings special expertise to the company

"It was I who found this profession," Ossi says. While still a student, he found a summer job in Petäjävesi in an electricity transmission company, spending days clearing the forest. A few summers later, he came to Hämeenlinna to do the same work. It later transpired that a permanent position of a Line Supervisor was available in Hämeenlinna. This work suited a forest specialist and vice versa – and so the company obtained special expertise for the management of its transmission lines.

We change some thoughts about the transfer of knowhow possessed by the ageing generation to the younger employees. Ossi says that he came to learn his work from a clean slate even though his colleagues helped him wherever necessary. After five years on the job, you have a grasp of the duties and can see "the forest for the trees". "Still, you learn new things all the time, for instance about technical issues."

We arrive at the Tikinmaa substation. Ossi walks under the lines and looks up. This time, he is examining the newly-installed jumpers, the wires connecting the circuits, of the down leads. He has the use of a camera so that the examination results can be viewed later on. After careful observations, we head on.

Responsible for more than one third of the grid

Ossi Muuronen and his colleague Kari Lindholm are jointly responsible for the area of Southern Finland in the Finnish transmission grid. This area houses more than one third of the line kilometres in

"The results of the work are based on precise observations. You need to keep your eyes and ears open while walking the lines."

the whole of Finland, so there is much to inspect.

Ossi drives some 50,000 to 60,000 kilometres a year. He spends more than one third of his annual working hours on the road, most of it in the summer. Ossi says that driving is already a routine part of work. While driving, he thinks about the future assignments, answers telephone calls and plans future work.

Office always along

Our talking is interrupted regularly as Ossi answers his mobile phone. There are telephone calls from landowners, suppliers and colleagues. Ossi answers, listens and says that he will get back: "I'll check, I'll see..." His office always follows him in the form of the telephone, and much of his day is spent talking on the phone. On the other hand, you cannot do everything on the road: the actual office is a place for planning and scheduling the work stages and for keeping contact with other parties.

The next stop is a transmission line area under construction, where, according to a report, machinery has blocked ditches. We park the car at the edge of the transmission line area.

"There is no point in driving the last five metres," Ossi says and adds that he has personally experienced what this old wisdom of line supervisors means.

Many things to watch

It is already raining quite heavily. We must put on rainwear and go on foot into the forest. My rubber boot slips easily out of inexperience, but Ossi is already way ahead of me on the cleared area.

The most important tools of Line Supervisors in the terrain are their own eyes and ears.

"The results of the work are based on precise observations. You need to keep your eyes and ears open while walking the lines," Ossi says. If you miss something, the consequences may be negative for a great number of people. The objective of the work is to ensure the trouble-free transmission of electricity and safety of power lines.

Natural environment always close by

In the watery conditions, we head for the next sites. The work list comprises inspections of reinforcements and concreting for towers to be erected, request for comment from a landowner concerning the location of a storage building, and inspections of cleared areas in various transmission line areas. The Line Supervisor has a "photographic memory" when it comes to tower locations and transmission line areas.

Even though the day is not actually something you dream of when walking in the forest, the bright yellow leaves brought by autumn glimmer amidst the gloom of autumn. The presence of the natural environment is strong wherever we drive.

Is it easy to move in the forest when there is a metre of snow? Ossi says that it is not necessary to wade in deep snow that often, and skis are a great help in the winter. In terms of line maintenance, spring is the best season, because trees have not broken into leaf yet, making it

easy to monitor the lines and move in the terrain.

Tough spots, but you get through them with restraint

The forest roads seem endless, but luckily the rain ceases – occasionally. Ossi checks the various cleared areas and makes a lot of notes. There are also tough spots every now and then – after all, the transmission lines traverse on someone's land, and landowners do not necessarily like that.

"The matters must be handled with restraint, and an understanding is always the goal," says Ossi. He appreciates the attitude of Finns: they normally accept things once the matter has been handled appropriately and proper arguments have been used.

There are also near miss situations. The most recent such event, a fire on a tower in Porvoo, is still in fresh memory. A real danger lurked close, because the collapse of the burnt tower leg could have caused much damage also to the adjacent transmission line.

However, successful action prevented major damage. Ossi is sincerely satisfied with the way the situation was managed – information was provided in time, action was taken swiftly, and the co-operation with the supplier ran smoothly.

"I'm on the line"

Ossi tells about the days when he was drawing up his Master's thesis in Lapland in the summer. This period has left an indelible impression in his mind. For Ossi Muuronen, work and hobby are linked with each other seamlessly. He has a cottage in Lapland, hundreds of kilometres from his home, which he visits frequently throughout the year. He also says that just the other weekend, he spent the night beside a campfire close to his home in the Evo hiking area. Forest is also a place for fishing and mushroom picking with friends, and for cross-country skiing in the winter. Ossi speaks of nature in a warm and respecting manner.

"The matters must be handled with restraint, and an understanding is always the goal."

The telephone rings when Ossi is reviewing the site. "I'm on the line here," says Ossi to the caller. They discuss the matter at hand right there and then, in the middle of a yellow-and-grey thicket. Between the telephone calls, Ossi tells me about the ongoing job and the results of each inspection.

Mutual knowhow exchange

While walking further, we talk about the importance of a good workplace community. Ossi commends his colleagues, with whom all matters can be managed in good co-operation and understanding. He and his closest colleague **Kari Lindholm** share the work areas and areas of responsibility. Ossi is in charge of forest-related matters in the whole of Southern Finland and for technical issues in the Häme-Uusimaa region while Kari is responsible for technology in Southwestern Finland.

Ossi thinks that their job descriptions complement each other very well when knowhow is exchanged mutually. Straightforward co-operation benefits each and brings more meaning to the work.

Worries fall off in Lapland

Does Ossi's work interfere with his leisure time or the other way around? Is he interested in transmission lines even while on holiday?

Ossi admits that he may sometimes suffer from a Line Supervisor's occupational disease: his head starts to spin whenever lines come into sight. Still, he says that worries soon fall off especially in Lapland, and he also tends to separate work and leisure time in other respects, too.

Back on the road, this time towards the home office. It's getting dimmer, and a more unexperienced trekker is already getting tired. Ossi has left me with an impression of a Line Supervisor who is truly dedicated to his work and who respects the great outdoors. His work and interest meet each other in a natural combination.

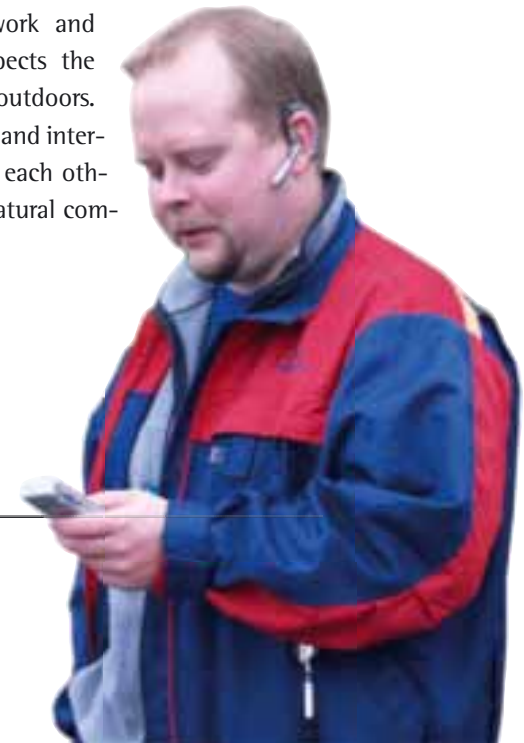

Finnish-Norwegian expert team finding protection faults

■ Protection system faults are sometimes the reason for disturbances in electricity supply. Fingrid and two Norwegian parties drew up a joint analysis of line and transformer protection faults on the basis of fault statistics from the Finnish and Norwegian transmission grids. The results were presented last June in Stockholm in the international PMAPS conference of the power system business.

Dr. Liisa Haarla from Fingrid and Ph.D. Gerd Kjølle from Sintef agreed on making a comparison of protection faults in the summer of 2005. Gerd Kjølle works as senior researcher in Sintef and Liisa Haarla now holds the five-year position of Professor in Power Transmission Systems at the Helsinki University of Technology. The professorship was donated by Fingrid in 2005.

PMAPS (Probabilistic Methods Applied to Power Systems) conferences have been arranged since 1986 at intervals of two or three years.

The PMAPS conference last summer gathered some 300 participants from about 40 countries. The number of conference publications was 192. These were divided into five topics, and about ten publications from each topic were first chosen to be reviewed by a jury. The publication "Protection system faults - a comparative review of fault statistics" drawn up by Fingrid, Helsinki University of Technology, Sintef and Statnett was included in the top league of publications chosen by the jury.

The main observation in the publication is that problems in line and transformer protection are usually related to its unnecessary operation, not so much to its failure to operate.

"In half of all cases, the unnecessary operation of protection results from human reasons. In other words, erroneous triggering is caused by the engineering, settings, installation or testing of the protection. Problems occur especially in modern microprocessor relays, which feature many setting options and hence also involve several potential failure possibilities," say **Lauri Koivisto** and **Patrik Lindblad**, who represented Fingrid in writing the report.

They say that unnecessary operation is highlighted in transformer protection, because transformers are expensive components, and their protection is often secured through various types of protection.

"On the other hand, unnecessary operation ultimately comes in cheaper than a failure to operate, which may result in the destruction of the transformer," they add.

In Norway, protection faults account for 20 per cent of electricity not delivered while the corresponding figure in Finland is only 4 per cent. According to the publication, the difference is probably due to geographical and structural differences and divergent statistical practices.

Kankaanpää – Lålby transmission line constructed by the French company Transel SAS

■ Fingrid will renew the 110 kilovolt transmission line running from Kankaanpää to the Lålby substation near Kristiinankaupunki in western Finland. The contractor in the project costing approx. 7.5 million euros is the French company Transel SAS.

The construction work commenced by foundation work in December, and the towers will be erected in the late winter. The line with a total length of 81 kilometres will be constructed in parts from one station to the other so that undisturbed electricity supply in the region can be ensured.

The site of the new transmission line now has a line with wooden towers, constructed in the 1970s, which will be dismantled. The new towers are guyed steel portal supports. The disconnectors and substation portal supports at the Kankaanpää substation will also be renewed. The line will be ready in October 2008.

All in a day's WORK

In this column, Fingrid's employees write about their one day at work. This time, the column has been written by **SUSANNA VALKONEN** who works as a Specialist in the Balance Service Unit.

Telemark and balance service

"Good morning," sounds the cheerful greeting from almost every workstation in the open-plan office of our unit when I get to work after 8.30 on Monday morning. As the computer is switching on, the wallpaper image of snowy mountains takes my thoughts back to the travel plans made in the weekend. I don't have to wait much longer before I can do telemark turns again on the slopes.

■ Received e-mail brings my thoughts back to our office. A balance provider states that they have patched up their sales information and asks what the situation with the September balances is.

■ My daily work involves information on the sales of electricity by Finnish electricity sellers and measurement readings on how much electricity is consumed within a certain network. Since it is difficult to store electricity or predict its consumption, someone has to take care of balancing the difference between the plans and actual situation. As a result of our work, we find out how much our balance provider customers have consumed the product we sell, balancing power.

■ The day is filled with the ringing of telephones as our balance settler colleagues throughout Finland inquire about measurements or regret the absence of readings. Someone wishes to have instructions on how to process the data and on the reporting schedule. A number Excel spreadsheets and edi messages are sent out to the world daily so that the electricity transactions could be settled and so that all balance settlers would have identical information.

■ After lunch, I participate in an internal meeting on the emissions of gas turbine plants. We review the situation concerning the emission rights of the plants and schedules for verification in the next year. Everything seems to be in order.

■ I return to our unit just in time for the afternoon coffee break. While sitting on the couch of the coffee room, we try to solve a tricky problem someone has just presented. It is not always easy to come up with a sensible answer, but creativity is a resource that rarely runs out, so our happy laughter can be heard far away.

■ Our office is getting quieter as my early bird colleagues are switching off their computers and heading for home. This is a good time to concentrate on reading. Pasi Lintunen is expecting my comments on our new balance settlement tool which is presently being drawn up.

■ I become absorbed in reading the related document until the ringing of the telephone interrupts me. There are so many numbers on the display that all of them do not even fit in the space provided. As I pick up the handset, I have time to think that being an international call, this is going to take more than my local dialect. Luckily, the caller speaks clear English, and after we have talked for a while, he seems to be content with the replies received on balance service and the terms used in the balance service agreement. This time there is no reason to continue in writing – not all foreign players are instantly up to date with the procedures applied in Finland.

■ Before going home, I print the agenda of the RECS group meeting to be held tomorrow. I am in the group to hear about news concerning the certificate market for renewable energy in Finland and elsewhere in Europe. This information is of use for Fingrid in our official duty as the party granting certificates of origin. We wish to attend to this duty as flexibly as possible, in co-operation with the customers.

■ It is snowing outdoors as I walk to the bus stop. Even though this is not yet permanent snow, it is no longer as dark as before, and I and my friend could go jogging in the beautiful winter weather. I continue with a smile on my face. It has been a good start for the week.

Time is now.

Photograph by FutureImage Bank

Another year at an end. Where did it go?

Where does time go? At Christmas, everyone knows it. Parents of small children know it throughout the year. It goes in haste. Christmas rush and work pressures. Congested years and quality time.

However, more time becomes available all the time. The wise in the Middle Ages had an explanation for this. They concluded that God creates more time continuously, so it does not run out.

If this is so, what is the length of time in which this world is being made? For some reason, the wise said that it is 9/13 of a second. In other words, you can never be ahead of your time; time is always a fraction of a second ahead of you.

Time does not run out, but there never seems to be enough of it. They say that time flies; that is probably why we have to run just to stay in place. But we cannot catch up with time although even the less proficient in languages can say that their motto is: carpe diem!

You have to make yourself available for time to catch up with you.

God creates time, but people came up with haste and the devil invented the calendar. Originally intended to interpret the interrelations of path of stars, crop and game yield and human destinies, the calendar has become a corset of development and an aid of slavery, no matter how well hidden inside the communicator it may be.

When people get older, they have to admit in many ways that life cannot be controlled after all, but life controls us. You can try to harness the imminent chaos by controlling time. Just think how much of an average working day is spent on agreeing on schedules and timing of meetings.

At forty years, you try to take a hold of time and have a rumbustious "over the hill" party. At fifty, you celebrate in a more restrained manner. At forty, you may play with the idea of still heading towards the midpoint in your life, the zenith of the hill. At fifty, you know that you just passed the halfway and it's all downhill from there.

When the horizon no longer moves, just you towards it, time gains a new meaning.

Or rather, life gains a new meaning.

The large post-war generations are now approaching an age by which they must accomplish their mission in life. Secondary busyness no longer appeals to them. And you can see it. For some, the rat race accelerates to a blinding speed while others deliberately fall off the race to a whole new existence. Some wish to show once more their competence while others wish to live as long as there's time.

Hastelessness and quietness are becoming a brand which is as sought-after as pure water and long human relationships. In our bit-by-bit life, there are glitches even in the time machine. Creativity experts have once again invented the importance of boredom. It's just that people no longer have the time or courage for just being, only for doing. Lack of things that keep you busy may reveal gorges in the structures of life. Besides, boredom is free, and surely, nothing cheap can be good, right?

You have to surrender yourself to be carried by time.

There is nothing as democratic as time. We all have the same 24 hours a day. But since is also money, it makes people unequal. The haste of a millionaire is completely different from that of a single parent mom working at the check-out counter of a local shop.

Many people buy themselves time by buying services. They buy welfare. At the same time, they inadvertently buy themselves out of their everyday being, the very one that keeps them attached to life when they once notice – often quite unexpectedly – that they are no longer in a hurry.

Besides, not all wish to have more time. Time drags slowly for the unemployed, sick and those who wait, especially if time is all they can expect, not life.

Shared time is at least twice as deep as normal time while the time of a lonely person seems manifold in length. During holidays – Christmas, New Year – people tend to gather together for a reason. Shared rites help us to meet the perishability of time but also encourage us to receive new time.

People have the right to expect and acquire more life in their years. But they do not have the right to require and demand more years in their lives. Both quantity and quality are important in time. This is why milestones such as the changing of the year are often points of profound self-study for many.

We need to let ourselves be taught by time.

Luckily there is enough time.

Hilkka Olkinuora is the columnist of the Fingrid magazine. She presents herself as follows: "Minister and journalist from Tampere, wrote earlier of economy, nowadays also again a student. Also works at workplaces, and discusses electric encounters in this magazine."

Photograph by Sami Kuitunen

FINGRID OYJ

Arkadiankatu 23 B, P.O.Box 530, FI-00101 Helsinki • Tel +358 30 395 5000 • Fax +358 30 395 5196 • www.fingrid.fi

Helsinki
P.O.Box 530
FI-00101 Helsinki
Finland
Tel. +358 30 395 5000
Fax +358 30 395 5196

Hämeenlinna
Valvomotie 11
FI-13110 Hämeenlinna
Finland
Tel. +358 30 395 5000
Fax +358 30 395 5336

Oulu
Lentokatu 2
FI-90460 Oulunsalo
Finland
Tel. +358 30 395 5000
Fax + 358 30 395 5711

Petäjävesi
Sähkötie 24
FI-41900 Petäjävesi
Finland
Tel. +358 30 395 5000
Fax +358 30 395 5524

Varkaus
Wredenkatu 2
FI-78250 Varkaus
Finland
Tel. +358 30 395 5000
Fax +358 30 395 5611