UNOFFICIAL TRANSLATION 8.7.2020

Reactive power requirements for power park modules and switched reactive power compensation

Table of contents

1 Introduction

Reactive power requirements for power park modules have been defined in the Grid Code Specifications for Power Generating Facilities VJV2018 (VJV2018 chapter 17.2). According to the defined requirements, there is a possibility for project specific deviations of reactive power capacity depending on a connection agreement. In addition, the requirements do not explicitly define requirements for switched and constantly connected reactive power compensation devices (typically capacitor banks) that are utilized to fulfill the reactive power capacity requirement. This document defines more specifically requirements for reactive power capacity of power plants regarding the following aspects:

- definition point for reactive power capacity requirement,
- maximum allowed amount of switched reactive power compensation,
- control method of switched reactive power compensation, and
- electrical design of reactive power compensation and power quality.

2 Definition point for reactive power capacity requirement

According to the VJV2018, the reactive power requirement shall be fulfilled at the connection point. The connection point is an agreement-based ownership limit, which is defined in the connection agreement. In addition, the method to define rated capacity of the power plant in the connection agreement may vary case by case. Ambiguous definition for reactive power capacity requirement may set different parties to an unequal position in similar power plant projects, even though the technical implementation of the projects is similar. Therefore, Fingrid has defined the reactive power capacity requirements as follows:

The rated capacity of the power plant (P_{max}) measured at the high voltage terminals of the power plant's step-up transformer may be used to define the required reactive power capacity, even though the power plant's rated capacity written into to the connection agreement is higher (typically sum of turbines rated capacity). In this case, the reactive power capacity shall be fulfilled at the high voltage terminals of the power plant's step-up transformer. The connecting grid and its losses, between the step-up transformer and the connection point, shall not be taken into account when defining the rated capacity and the required reactive power capacity of the power plant. Image 1 visualizes the issue.

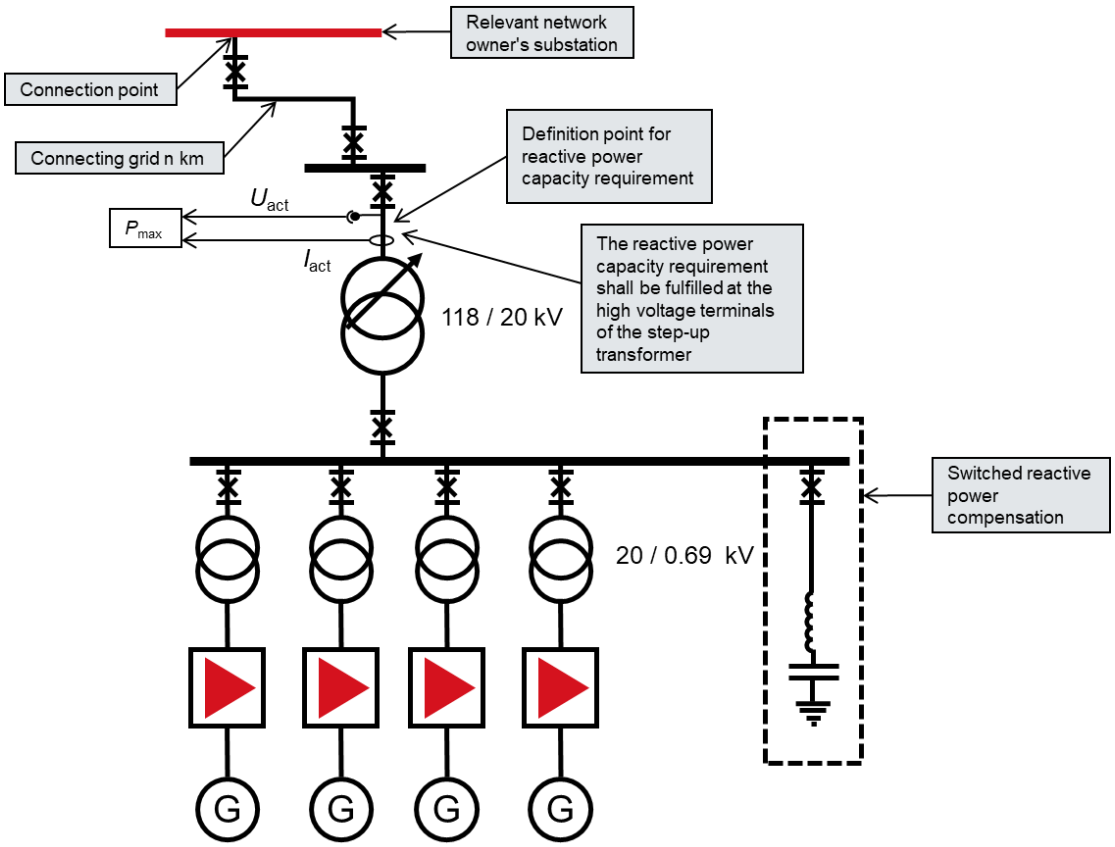

Image 1. Definition point for reactive power capacity requirement.

3 Maximum allowed amount of switched reactive power compensation

Power plant's reactive power capacity may be extended with switched reactive power compensation devices, in case the reactive power capacity of power park modules shall not be sufficient to fulfill the requirements. According to the grid code (VJV2018), a control system shall be carried out so that the control operates continuously and so that the changes in reactive power at the connection point as a result of the control take place steplessly.

Fingrid has defined that the maximum allowed amount of switched reactive power compensation of a power plant shall be 15 % of the required total reactive power capacity, thus the control and reactive power changes are considered continuous and stepless. In addition, power park modules of the power plant shall fulfill the required reactive power capacity without switched reactive power compensation, when active power production is below 85 % of the rated capacity (P_{max}). Image 2 visualizes the issue.

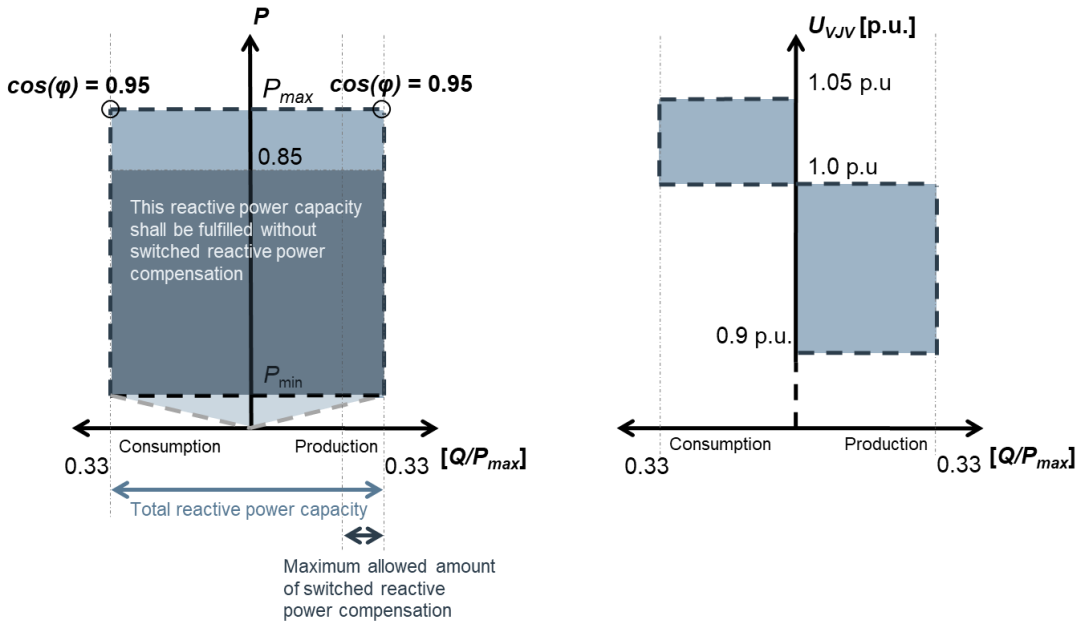

Image 2. Reactive power capacity requirement and maximum allowed amount of switched reactive power compensation.

In addition to the reactive power capacity of the power park modules and the switched reactive power compensation, a constantly connected reactive power compensation may be used. The constantly connected reactive power compensation may be implemented to compensate the reactive power consumption of transformers and power plant grid components. As well in this case, the power park modules of the power plant shall fulfill the required reactive power capacity without switched reactive power compensation, when active power production is below 85 % of the rated capacity (P_{max}). See image 2.

3.1 Example calculation of the maximum allowed amount of switched reactive power compensation

This example demonstrates the maximum allowed amount of switched reactive power compensation.

Rated power of the power plant (P_{max}) is 100 MW.

Required total reactive power capacity is 0.33 (input)…0.33 (output) Q/P_{max},

required total reactive power capacity is 33 + 33 = 66 (Mvar).

The maximum allowed amount of switched reactive power compensation is 0.15 * 66 = 9.9 (Mvar).

4 Control method for switched reactive power compensation

A control of the switched reactive power compensation shall be based on the active power produced by the power plant, there shall be hysteresis between switch-in and switch-out. The control shall not be based on reactive power produced.

The switched reactive power compensation shall switch-in/-out, when active power produced hits a switch limit:

- switch-in limit shall be between 0,60…0,80 * (P_{max}),
- switch-out limit shall be between 0,20…0,40 * (P_{max}).

A power plant's owner may choose the limits within the given range. By choosing the limits, there is a possibility to affect the amount of switch operations and operational time that the compensation device is connected to the grid.

The switched reactive power compensation device may be constantly connected to the grid, if the power plant's power park modules' reactive power capacity or other means are constantly used to compensate the capacitive reactive power of the compensation device while active power is not produced. A constantly connected compensation device adds slightly losses, and it increases a risk of possible resonance (see chapter 5).

4.1 Dividing reactive power compensation device into sections

Typically, a switched reactive power compensation is connected to the power plant's medium voltage switchgear. A switch-in of a large compensation device may lead to too large voltage step within the power plant's medium voltage grid. In addition, switch-in shall not cause larger than 3 % stepwise change in the relevant network operator's grid. If the given boundaries exceed, the switched reactive power compensation device shall not be constructed as one entity, in this case it has to be divided into smaller sections.

If compensation device is divided into smaller sections, then all of the sections shall comply with requirements given in chapter 4. The switch-in/-out limits for multiple compensation devices shall be staggered to ensure that the devices do not switch-in/-out simultaneously.

5 Electrical design of the reactive power compensation device and power quality

Grid power quality at the point of connection and the compensation device's that affect to the power quality shall be taken into account when designing the compensation device. The relevant network operator provides information about the grid power quality. Fingrid's power quality is publicly presented in a report "Power quality in Fingrid's 110 kV grid", which is available on Fingrid's website.

There are multiple options to implement a switched reactive power compensation device: capacitor bank, detuned capacitor bank, tuned harmonic filter bank and broadband harmonic filter bank. Fingrid recommends implementing the compensation device as a

detuned capacitor bank or as a filter bank. For a detuned capacitor bank, recommended tuning frequency is 220 Hz at maximum.

A capacitor bank and power plant's transformer may comprise an unwanted filter circuit for a certain harmonic frequency present in the grid, which leads to a heavy loading for the capacitor. In addition within the power plant's grid, or at power plant's high voltage substation, there is a risk for an adverse parallel resonance on a certain harmonic frequency. The resonance may damage the capacitor bank or other components of the power plant. The connecting party is advised to mitigate the resonance risk by taking into account power quality factors, and to design and dimension compensation devices according to the local prevailing conditions.